Data Collection Form

Part B : Quantitative Scoring Model
(To be completed for projects requesting more than $90,000)

Okaloosa RESTORE Advisory Committee

Approved by the Okaloosa RESTORE Advisory Committee: December 4, 2014
Okaloosa County, Florida

Part B: Quantitative Scoring Model (required for projects requesting over $90K)

ECONOMIC FACTORS

B.1 Economic Factor #1: Project Expenditures

In the "Expenditures" table, provide best estimates of the annual costs associated with the proposed project. Some projects, such as a simple land acquisition project, will only require a one-time purchase of a parcel of property with minimal maintenance costs thereafter. You may enter the estimated purchase price in Year 1. Other activities, such as the construction of a proposed recreation complex, may require the purchase of property, the purchase of equipment and funds for long-term maintenance. Please provide best estimates of these one-time and long-term costs for the first ten years of your project's life in the section below for each category that is applicable to your proposed project. If categories are not applicable to your project, please check the box indicated N/A beside each of categories that do not apply. For each expenditure entered, you will be required to describe and justify the expenditure in the section that follows. In the Expenditures section, you will note that there is an opportunity to estimate the total costs of servicing any debt that you may need to incur in order to execute the project. If you will be borrowing money to aid in the execution of the project, you will be asked later in the application to attach documentation demonstrating that you have the capacity to obtain the loan. For each expenditure entered, describe and justify the expenditure in the section that follows. Use current year dollars rounded to the nearest dollar.

("Expenditures" table is on next page)

Expenditures										
	Year 1	Year 2	Year 3	Year 4	Year 5	Year 6	Year 7	Year 8	Year 9	Year 10
Land Acquisition										
Total Estimated Costs of Acquiring Land	$	$	$	$	$	$	$	$	$	$
Construction										
Total Estimated Construction Costs	$ 1,087,700.00	$	$	$	$	$	$	$	$	$
Equipment										
Total Estimated Equipment Purchases	$ 300,000.00	$	$	$	$	$	$	$	$	$
Long-term Operational Expenses										
Labor Costs	$	$	$	$	$	$	$	$	$	$
Utility Costs	$	$	$	$	$	$	$	$	$	$
Equipment Maintenance	$	$	$	$	$	$	$	$	$	$
Other Maintenance Costs	$	$	$	$	$	$	$	$	$	$
Debt Service	$	$	$	$	$	$	$	$	$	$
License Costs	$	$	$	$	$	$	$	$	$	$
Other Operational Costs (Please Specify type)	$	$	$	$	$	$	$	$	$	$
Other Operational Costs (Please Specify type)	$	$	$	$	$	$	$	$	$	$
Other Operational Costs (Please Specify type)	$	$	$	$	$	$	$	$	$	$
							Total Expenditures	$ 1,387,700.00		

B.1.1 "Expenditures" Table

B.1.2 Provide a description of the property to be purchased. (250 words max)

None. Right-of-way permit has been received from Okaloosa County; see attached permit.

B.1.3 Provide a justification for construction costs. (250 words max)

See attached Engineer's Opinion of Cost which is based on established design criteria and on capacity, safety, and redundancy requirements.

B.1.4 Describe equipment over $5,000 per item to be purchased (Itemize). (250 words max)

The items of equipment that cost in excess of $5,000 are included in the Opinion of Cost and include the pumps, valves, flow meters, and emergency pump, all are vital components of the design.

B.1.5 Describe and justify long-term operational expenses. (250 words max)

The operational costs of City of Mary Esther's lift stations are the responsibility of the City. The replacement of the aged and deteriorated lift station will not only reduce the danger of failure and its dire consequences but will likely reduce operational costs as a result of the newer more efficient design and equipment.

B.1.6 Describe jobs created for the short term and long term along with the salary scales. (250 words max)

It is projected that 10 jobs will be created as a result of the construction of the lift station.

B.2 Economic Factor #2: Project Revenues

In the "Revenues" table, provide best estimates of the annual revenue generated by the project over the long term. Certain projects will generate revenue over the long term beyond the revenue acquired through the RESTORE process. For example, a proposed convention center built by RESTORE dollars might charge a fee to lease space to users, or a recreation facility may charge users to host events. If the project will generate sales/fee type revenues on an annual basis, please provide those revenue estimates on the sales line. If your project will require additional funds from government sources to ensure that it remains operational, please indicate those needs on the government contribution lines. (For example, a road constructed utilizing RESTORE dollars will need maintenance from city/county/state or federal government entities over time.) If your project will receive private contributions (donations, etc.) in order to meet long-term operational expenses, please indicate that on the donations line. If you are borrowing money in order to finance a portion of the project, please indicate the total value of the loan in the appropriate year(s). And finally, please estimate the total number of RESTORE dollars that you will need in each year to execute your project. (For example, a land acquisition would probably require all RESTORE dollars in the first project year. However, a construction project that stretches over a three year period would probably need only a fraction of the total project cost to execute the project in any given year.) If you are receiving matching funds from other sources to complete your project, those funds will be counted below. For example, if you are proposing a $2 million construction project and are asking for $1 million from RESTORE to match a $1 million donor pledge, you would enter $1 million from RESTORE in the appropriate year and $1 million in other private contributions in the appropriate year. Use current year dollars rounded to the nearest dollar.

("Revenues" table is on the next page.)

Revenues

	Year 1	Year 2	Year 3	Year 4	Year 5	Year 6	Year 7	Year 8	Year 9	Year 10
Estimated Annual Revenue (by Source)										
Total Revenue from RESTORE Grant	$	$	$	$	$	$	$	$	$	$
Total Revenue from City Government	$	$	$	$	$	$	$	$	$	$
Total Revenue from County Government	$	$	$	$	$	$	$	$	$	$
Total Revenue from State Government	$	$	$	$	$	$	$	$	$	$
Total Sales Revenue (user fees, lease fees, product revenue, etc.)	$	$	$	$	$	$	$	$	$	$
Other Private Contributions (donations, private grants, etc.)	$	$	$	$	$	$	$	$	$	$
Loan	$	$	$	$	$	$	$	$	$	$
Other Revenue (please specify)	$	$	$	$	$	$	$	$	$	$
Other Revenue (please specify)	$	$	$	$	$	$	$	$	$	$
Total Revenues*	$ 0.00	$ 0.00	$ 0.00	$ 0.00	$ 0.00	$ 0.00	$ 0.00	$ 0.00	$ 0.00	$ 0.00

Total Revenue	$ 0.00

B.2.1 "Revenues" Table

B.2.2 Describe the type and nature of the sales revenues generated. (250 words max)

The project will not generate direct revenue, however it can protect approximately $967,272 in city wastewater revenue (FY2015-16 projection). Additionally, this will allow the City to avoid an estimated $200,000 to $400,000 in fines that will be imposed by Florida's FDEP in the event of a failure. Operating and maintenance costs of the lift station will be funded by revenue received by the City of Mary Esther for its wastewater collection and treatment system. The project will reduce operational and maintenance costs and limit or further delay future increases in fees collected from ratepayers.

B.2.3 Describe and justify a local government contribution. (250 words max)

The City of Mary Esther does not have sufficient funds for the immediate replacement of the lift station and continued delays could result in an economic and environmental disaster. The benefits - and the avoided consequences of inaction - will accrue to the benefit of the residential community, the business community, the traveling public, and vacationers who enjoy the area's recreational opportunities. It is appropriate that the City of Mary Esther and Okaloosa County, through its RESTORE Committee, both participate in the funding of the project.

B.2.3.1 If local government approval of long-term funding has been secured, attach documentation to the application indicating such approval.

B.2.4 Describe the process for securing donations. (250 words max)

The City is proposing to fund the project with a combination of its own funds, RESTORE Act Funds, and grants from the State of Florida. A State Legislative appropriation has been solicited.

B.2.4.1 If donor pledges have been secured, attach documentation.

B.2.5 Describe the nature of the Loan that you are seeking and attach any documentation that you have that demonstrates your capacity to obtain the loan. (250 words max)

The City is not seeking a loan at this time.

GENERAL FACTORS

B.3. General Factor #1: Implementation Readiness - Permitting

B.3.1 Does your project require permitting? Select one of the following:

- ☐ Yes, permitting NOT complete (0 points)
- ☒ Yes, ALL permitting complete (5 points)
- ☐ No permitting required (skip to **B.3.2**) (5 points)

B.3.1.1 What type of permit is required?

- ☐ Construction
- ☐ Right-of-Way
- ☐ Easement
- ☐ Business
- ☐ Development Order
- ☒ Other. Describe: FDEP Permit

B.3.1.2 When do you expect to have all required permits?

- ☒ Less than 3 months (3 points)
- ☐ 3 – 6 months (2 points)
- ☐ 6 – 9 months (1 points)
- ☐ More than 9 months (0 points)

B.3.1.3 Upload copy of permit if available.

B.3.2 Does your project require any coordination or governmental approvals?

- ☐ Yes, coordination or government approval NOT complete (0 points)
- ☐ Yes, ALL coordination or governmental approval complete (5 points)
- ☒ None required (skip to **B.3.3**) (5 points)

B.3.2.1 What type of coordination or approval is required?

- ☐ Inter-local agreement
- ☐ Land Use Change
- ☐ Re-zoning
- ☐ Other

B.3.2.2 When do you expect to have all coordination or approval complete?

- ☐ Less than 3 months (3 points)
- ☐ 3 – 6 months (2 points)
- ☐ 6 – 9 months (1 points)
- ☐ More than 9 months (0 points)

B.3.2.3 Upload copy of coordination or government approval if available.

B.3.3 Provide any additional relevant information on permits, coordination or approval. (120 words max)

No additional permits, coordination, or approval required. The project is "shovel ready."

B.3.4 Upload your supporting documentation

B.4 General Factor #2: Implementation Readiness – Design

B.4.1 Does your project require a design?

- ☐ Yes, design NOT complete (0 points)
- ☒ Yes, design IS complete (skip to **B.4.2**) (5 points)
- ☐ No design required (skip to **B.5**) (5 points)

B.4.1.1 What is the approximate percent of design completion?

- ☐ 0%
- ☐ 30%
- ☐ 65%
- ☐ 95% (nearly design complete)

B.4.1.2 When do you expect to have design complete?

- ☐ 0 – 4 months (3 points)
- ☐ 4 – 8 months (2 points)
- ☐ 8 – 12 months (1 points)
- ☐ More than 12 months (0 points)

B.4.2 Provide any additional information as it relates to design. (120 words max)

Design is complete. Project is "shovel ready."

B.4.3 Upload your supporting design documentation.

B.5 General Factor #3: Implementation Readiness: Land/Property Ownership

B.5.1 Does your project require the use of land/property?

- [x] Yes (0 points)
- [ ] No (skip to the **B.6**) (10 points)

B.5.1.1 What is your (project advocate's) ownership status of the land/property?

- [x] Owned by project advocate (skip to **B.5.2**) (10 points)
- [ ] Partially owned by project advocate or documented commitment from owner to sell (attach documentation in **B.5.3**) (5 points)
- [ ] Needs to be acquired (0 points)

B.5.1.2 When do you expect to have full ownership (or unrestricted use)?

- [ ] Less than 3 months (3 points)
- [ ] 3 – 6 months (2 points)
- [ ] 6 – 9 months (1 points)
- [ ] More than 9 months (0 points)

B.5.2 Provide any additional information as it relates to land/property ownership. (120 words max)

The lift station site is within the public right-of-way of Doolittle Drive which is owned by Okaloosa County which has granted permission to the City of Mary Esther for the lift station.

B.5.3 Upload your supporting documentation.

B.6 General Factor #4: Project Feasibility –Proven Success

B.6.1 Has type of project proposed been implemented elsewhere?

- [x] Yes
- [ ] No (skip to **B.6.1.4**)

B.6.1.1 What is the historic success of projects that share this approach/technology?

- [x] Extremely common; significant success with projects that share approach/technology (10 points)
- [ ] Common; limited success with projects that share approach/technology (8 points)
- [ ] Uncommon; little documented success and limited projects that share similar approach/ technology (4 points)
- [ ] Rare; no documented success and approach/technology is experimental or theoretical (0 points)

B.6.1.2 Explain where similar project was previously implemented and results. If multiple examples exist, use the most similar / relevant. (240 words max)

Lift stations are standard components in most wastewater collection systems and are critical to the flow of wastewater to the treatment plant.

B.6.1.3 Upload your supporting documentation.

Skip to **B.7**

B.6.1.4 To the best of your knowledge, why has this type of project never been implemented?

- [ ] Approach / technology is extremely new
- [ ] Conditions have not existed to implement this approach / technology
- [ ] Lack of funding
- [ ] Other. Describe: _____

B.6.1.5 Provide information that details why this "unproven" effort will now be successful.

(240 words max) (up to 4 points)

B.6.1.6 Upload your supporting documentation.

ENVIRONMENTAL FACTORS

B.7 Environmental Factor #1: /Restore/Enhance/Protect Habitats

B.7.1 Which best describes the type of habitat impacted? (Select one)

- [ ] Marine
- [x] Coastal
- [ ] Freshwater
- [ ] Estuarine
- [ ] Upland
- [ ] None
- [ ] Other: _____

B.7.2 What best describes the impact of your project on habitat? (Select one)

- [ ] Restore/Enhance (10 points)
- [x] Protect/Conserve (8 points)
- [ ] Offset through Mitigation / None (0 points)
- [ ] Allowable/Permitted Impact (-10 points)

B.7.3 Identify geographical area impacted and provide information as it relates to restoring, enhancing or protecting habitat (240 words max).

The subject lift station (L/S) is immediately across Doolittle Blvd. from Oak Tree Nature Park through which flows Silver Sands Creek. The Creek is only 210' from the L/S and loops around it as it flows toward Santa Rosa Sound; from the L/S to the Sound is only 635'. The proximity of the stream bed provides a natural channel for the flow of wastewater spilled from the lift station into the Sound. The 1250 gallons per minute flow of sewage, the lack of an emergency bypass, and the short distance creates a situation in which emergency measures in response to a spill could not be implemented in sufficient time to avoid a natural disaster in the Creek and Sound. Tidal flows will disperse any spilled sewage in both directions from the mouth of the Creek which could devastate the ecology and the flora and fauna of the Sound. Additionally, recreational activities in the affected area will be closed for several months.

B.7.4 Is your project intended to improve the habitat of a listed / managed / protected species?

- [ ] Yes (1 point) ; If yes, what type?_____
- [x] No (0 points)

B.7.5 Is your project intended to reduce an invasive species within a habitat?

- [ ] Yes (1 point); If yes, what type? _____
- [x] No (0 points)

B.7.6 Please provide any additional information on the above items (120 words max)

B.7.7 Is the project consistent with the goals of an adopted local, regional, state, or national comprehensive plan to restore, enhance or protect habitat?

- [x] Yes (2 points)
- [ ] No, there is no plan associated with this project (0 points) (skip to **B.8**)

B.7.7.1 Identify the adopted local, regional, state, or national comprehensive plan(s): City of Mary Esther Comp. Plan; State of Florida Comp. Plan

B.7.7.2 Provide any additional information on the above items to demonstrate compliance with the goals and objectives of the plan (120 words max)

CITY: Objective 11.B.4—Continually conserve, appropriately use and protect fisheries, fishery habitats, wildlife habitats and other marine or wildlife resources in or near the city upon adoption of this ordinance.
STATE: Policy 7.b.12. Eliminate the discharge of inadequately treated wastewater and stormwater runoff into the waters of the state.
Policy 8.b.4. Protect coastal resources, marine resources, and dune systems from the adverse effects of development.
COMMENT: The project will protect fishery and wildlife habitats and coastal and marine resources.

B.7.7.3 Attach any supporting documentation

B.8 Environmental Factor #2: Replenish/Protect Living Coastal & Marine Resources

B.8.1 Which living coastal or marine resources are directly protected or restored by the project? (check all that apply)

- [ ] Finfish
- [ ] Shellfish
- [ ] Birds
- [ ] Mammals
- [ ] Reptiles
- [ ] Amphibians
- [ ] Coral
- [ ] Benthic Communities
- [x] Other. Describe: Many on the list will be adversely affected; could not check more than one.
- [ ] None (Skip to **B.9**)

B.8.1.1 Describe injuries or threats to the resources identified and how your project addresses those injuries or threats. (120 words max)

The failure of the existing lift station will result in spillage of raw sewage into Silver Sands Creek and Santa Rosa Sound resulting in pollution of Class II waters, threats to public health, to wildlife habitat, and to the finfish, shellfish, birds, mammals, and benthic communities that inhabit those waterways.

B.8.2 Which best describes the impact of your project on living coastal or marine resources? (select one)

- ☐ Restore/Enhance (10 points)
- ☒ Protect/Conserve (8 points)
- ☐ Offset through Mitigation / None (0 points)
- ☐ Allowable/Permitted Impact (-10 points)

B.8.3 Provide information as it relates to restoring or protecting living coastal or marine resources (240 words max).

The replacement of the existing aged (constructed in 1964) and deteriorated lift station is a proactive measure with the specific purpose of protecting the marine resources and estuarine environment of Silver Sands Creek and Santa Rosa Sound.

B.8.4 Does your project address one or more of the following? (check all that apply)

- ☐ Overfishing and by-catch; Increased resource stocks; or Improved fisheries assessment (e.g. marine resource data collection that includes fishery dependent or fishery independent data collection) (2 points)
- ☑ Public access or use of inshore, coastal or offshore marine resources; or Sustainable resource management of commercially & recreationally important activities (e.g. fishing, hunting, wildlife watching, etc.) (2 points)
- ☐ Removal of barriers to improve freshwater inflow and fish passage; or Improved sediment management; or Restoration of coastal wetlands; or Restoration of eroded shorelines; or River diversions; or other types of hydrologic restoration; or Natural ridge restoration (2 points)
- ☐ Implementation of living shoreline techniques; or restoration or protection of natural shorelines or wetlands (2 points)
- ☐ Recovery of threatened/endangered species; or management/removal of invasive and nuisance species (2 points)

B.8.5 Is the project consistent with the goals of an adopted local, regional, state, or national comprehensive plan to replenish or protect coastal or marine resources?

- ☒ Yes (2 points)
- ☐ No (0 points) (skip to **B.9**)

B.8.5.1 Identify the adopted local, regional, state, or national comprehensive plan(s): City of Mary Esther Comp. Plan; Okaloosa County Comp. Plan

B.8.5.2 Provide any additional information on the above items to demonstrate compliance with the goals and objectives of the plan (120 words max)

CITY: Objective 11.B.2—Conserve, appropriately use and protect the quality and quantity of water sources and of waters that flow into Santa Rosa Sound
COUNTY: Objective 1.2 Preserve and protect the environmental quality of estuarine environments, coastal wetlands, living marine resources, and coastal barriers by prohibiting or restricting development, or by limiting specific impacts and cumulative impacts of development or redevelopment.
COMMENT: The project will protect water resources that flow into Santa Rosa Sound, protect estuarine environments and coastal and marine resources.

B.8.5.3 Attach supporting documentation.

B.9 Environmental Factor #3: Restore/Improve/Protect Water Resources

B.9.1 Which best describes the impact of your project on water quality? (check only one)

- [x] Improve (10 points)
- [ ] Re-use (8 points)
- [ ] Water quality monitoring (8 points)
- [ ] None/Permitted (0 points)

B.9.2 Does your project benefit one or more of the following? (check all that apply)

- [x] Fresh water resource (including aquifers & re-use projects)
- [x] Estuarine water resource
- [x] Marine water resource

B.9.3 Identify the water source/body affected and provide information as it relates to improving water quality (240 words max)

The water quality of both Silver Sands Creek and Santa Rosa Sound will be protected as a result of the project by the prevention and the reduction of the risk of failure of the existing lift station that was originally constructed in 1964.

B.9.4 Does your project address one or more of the following? (Check all that apply)

- [x] Implementation of watershed best management practices (2 points)
- [ ] Improved agricultural or silvicultural management practices (2 points)
- [ ] Improved stormwater management (2 points)
- [x] Improved wastewater management (2 points)
- [ ] Long-term monitoring of water quality changes (2 points)
- [ ] Improve discharges to & withdrawals from critical systems (2 points)
- [x] Reduce or treat nutrient or pollutant loading (2 points)
- [ ] Improve management of freshwater flows (2 points)

B.9.5 Is the project consistent with the goals of an adopted local, regional, state, or national comprehensive plan to restore, improve or protect water quality?

- [x] Yes (2 points)
- [ ] No (0 points) (skip to **B.10**)

B.9.5.1 Identify the adopted local, regional, state, or national comprehensive plan(s): State of Florida Comprehensive Plan; City of Mary Esther Comp. Plan

B.9.5.2 Provide any additional information on the above items to demonstrate compliance with the goals and objectives of the plan (120 words max)

STATE: Policy 7.b.12. Eliminate the discharge of inadequately treated wastewater and stormwater runoff into the waters of the state.
CITY: Policy 11.B.2.1—The city shall protect water quality by restricting or prohibiting activities known to adversely affect the quality or quantity of identified water sources.
COMMENT: The project will protect against the runoff of untreated wastewater into the waters of the state.

B.9.5.3 Attach supporting documentation

B.10 Environmental Factor #4: Enhanced Environmental Resilience

B.10.1 Does your project build and sustain the ability to protect against short-term and long-term natural and man-made threats and injuries? (check all that apply)

- [x] Long-term land use planning related to management and sustainability of coastal resources (2 points)
- [ ] Acquisition or preservation of undeveloped lands in coastal high hazard areas (2 points)
- [ ] Non-structural storm and surge protection (2 points)
- [ ] Design mitigation programs that are incentive based (2 points)
- [x] Natural resource recovery and planning; Risk assessments (2 points)
- [ ] Other ecosystem restoration measures (2 points)

B.10.2 Provide information as it relates to enhancing environmental resilience. (240 words max)

The very purpose of the project is to protect against a man-made (though serving a vital function) threat to the high quality environment of Santa Rosa Sound.

B.10.3 Is the project consistent with the goals of an adopted local, regional, state, or national comprehensive plan to enhance environmental resilience?

- [x] Yes (2 points) ; If yes:
- [ ] No (0 points)

B.10.3.1 Identify the adopted local, regional, state, or national comprehensive plan(s): Okaloosa County Comp. Plan

B.10.3.2 Provide any additional information on the above items to demonstrate compliance with the goals and objectives of the plan (120 words max)

COUNTY: Objective 1.2 Preserve and protect the environmental quality of estuarine environments, coastal wetlands, living marine resources, and coastal barriers...
COMMENT: The project will provide long term protection against the spillage of raw sewage into Silver Sands Creek and Santa Rosa Sound thus enhancing environmental resilience.

B.10.3.3 Attach supporting documentation

END OF PART B

The City of Mary Esther
Main Lift Station
HMM Project No. 332640

Opinion of Cost

ITEM NO.	DESCRIPTION	UNIT OF MEASURE	QUANTITY	UNIT COST	TOTAL
1	Mobilization	LS	1	$ 70,000	$ 70,000
2	Clearing and Grubbing	LS	1	$ 7,500	$ 7,500
3	Demolition of Existing Pump Station	LS	1	$ 50,000	$ 50,000
4	Traffic Maintenance	LS	1	$ 35,000	$ 35,000
5	Pumps and Rail	LS	1	$ 320,000	$ 320,000
6	Wet Well	LS	1	$ 275,000	$ 275,000
7	Piping	LS	1	$ 75,000	$ 75,000
8	Bypass pumping	LS	1	$ 35,000	$ 35,000
9	Coating	LS	1	$ 35,000	$ 35,000
10	Fence	LS	1	$ 12,000	$ 12,000
11	Gravel Road	LF	159	$ 60	$ 9,540
12	Manhole	EA	3	$ 18,000	$ 54,000
13	Gravity Line	LF	90	$ 250	$ 22,500
14	Waterline relocation	LS	1	$ 15,000	$ 15,000
15	Sodding	SY	750	$ 8	$ 6,000
16	Dewatering	LS	1	$ 30,000	$ 30,000
17	Sheeting and Shoring	LS	1	$ 100,000	$ 100,000
18	Concrete	SF	500	$ 10	$ 5,000
19	Top Slab	LS	1	$ 15,000	$ 15,000
20	Backup pump	LS	1	$ 90,000	$ 90,000
				Sub-total	$ 1,261,540
				10% Cont.	$126,154
			TOTAL		**$1,387,700**

FLORIDA DEPARTMENT OF ENVIRONMENTAL PROTECTION
NORTHWEST DISTRICT
160 W. GOVERNMENT STREET, SUITE 308
PENSACOLA, FLORIDA 32502-5740

RICK SCOTT
GOVERNOR

CARLOS LOPEZ-CANTERA
LT. GOVERNOR

JONATHAN P. STEVERSON
SECRETARY

May 6, 2015

BY ELECTRONIC MAIL
(cmgr@cityofmaryesther.com)

NOTIFICATION OF ACCEPTANCE OF USE OF A GENERAL PERMIT

PERMITTEE:
City of Mary Esther
Ms. Lynne Oler
City Manager
195 Christobal Road
Mary Esther, Florida 32569

PERMIT NUMBER: 0334665-001-DWC/CG
ISSUE DATE: May 6, 2015
EXPIRATION DATE: May 5, 2020
COUNTY: Okaloosa
PROJECT NAME: City of Mary Esther Main Lift Station Relocation
WASTEWATER TREATMENT: Mary Esther WWTP
FACILITY ID: FLA010191

Dear Ms. Oler:

This letter acknowledges receipt of your *Notification/Application for Constructing a Domestic Wastewater Collection/Transmission System* for the subject project. Our Office received the Notice on May 4, 2015. This is to advise you that the Department does not object to your use of such general permit.

The project will replace the City's existing Main Lift Station at the intersection of Highway 98 and Doolittle Boulevard with a new triplex submersible lift station equipped with a an emergency portable pump to be located approximately 80 LF north of the existing location along Doolittle Boulevard. The flow to the existing lift station that will be rerouted by installation of approximately 100 LF of 12-inch PVC gravity sewer and three manholes along Doolittle Boulevard to the new triplex submersible lift station, which will connect to an existing 8-inch force main on the west side of the lift station. The construction shall be in accordance with the construction sheet C2.0, as certified by Amir Zafar, P.E. on May 1, 2015.

Please note the attached requirements apply to your use of this general permit for constructing the proposed domestic wastewater collection/transmission system. You are further advised that the construction activity must conform to the description contained in your *Notification/Application for Constructing a Domestic Wastewater Collection/Transmission System* and that any deviation may subject the permittee to enforcement action and possible penalties.

When referring to this project, please use the project name and file number indicated above. If you have any questions, please contact Tariq Mian at (850)595-0618.

Sincerely,

William A. Evans, P.E.
Wastewater Permitting Supervisor

c:
Amir Zafar, P.E., Hatch Mott MacDonald (amir.zafar@hatchmott.com)
Douglas Phillips, P.E., Hatch Mott MacDonald (douglas.philips@hatchmott.com)
John Hofstad, Okaloosa County Administrator (managerinfo@co.okaloosa.fl.us)
Environmental and Community Health Section Chief, FDOH Okaloosa County
(Dana.Grissom@flhealth.gov)

REQUIREMENTS FOR USE OF THE GENERAL PERMIT FOR DOMESTIC WASTEWATER COLLECTION/TRANSMISSION SYSTEMS:

1. This general permit is subject to the general permit conditions of Rule 62-4.540, F.A.C., as applicable. This rule is available at the Department's Internet site at: http://www.dep.state.fl.us/water/rulesprog.htm#ww [62-4.540]

2. This general permit does not relieve the permittee of the responsibility for obtaining a dredge and fill permit where it is required. *[62-604.600(6)(b)1]*

3. This general permit cannot be revised, except to transfer the permit. *[62-604.600(6)(b)2]*

4. This general permit will expire five years from the date of issuance. If the project has been started and not completed by that time, a new permit must be obtained before the expiration date in order to continue work on the project. *[62-4.030]*

5. Upon completion of construction of the collection/transmission system project, and before placing the facilities into operation for any purpose other than testing for leaks or testing equipment operation, the permittee shall submit to the Department's HQ District Office Form 62-604.300(8)(b), Request for Approval to Place a Domestic Wastewater Collection/Transmission System into Operation. This form is available at the Department's Internet site at: http://www.dep.state.fl.us/water/wastewater/forms.htm *[62-604.700(2)]*

6. The new or modified collection/transmission facilities shall not be placed into service until the Department clears the project for use. *[62-604.700(3)]*

7. Abnormal events shall be reported to the Department's HQ District Office in accordance with Rule 62-604.550, F.A.C. For unauthorized spills of wastewater in excess of 1000 gallons per incident, or where information indicates that public health or the environment may be endangered, oral reports shall be provided to the STATE WATCH OFFICE TOLL FREE NUMBER (800)320-0519 as soon as practical, but no later than 24 hours from the time the permittee or other designee becomes aware of the circumstances. Unauthorized releases or spills less than 1000 gallons per incident are to be reported orally to the Department's HQ District Office within 24 hours from the time the permittee, or other designee becomes aware of the circumstances. *[62-604.550]*

CONSTRUCTION PLANS
FOR

MAIN LIFT STATION REPLACEMENT

MARY ESTHER, FLORIDA

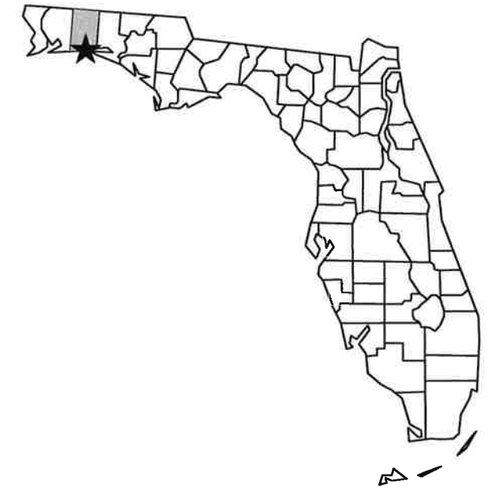

MAY 2015

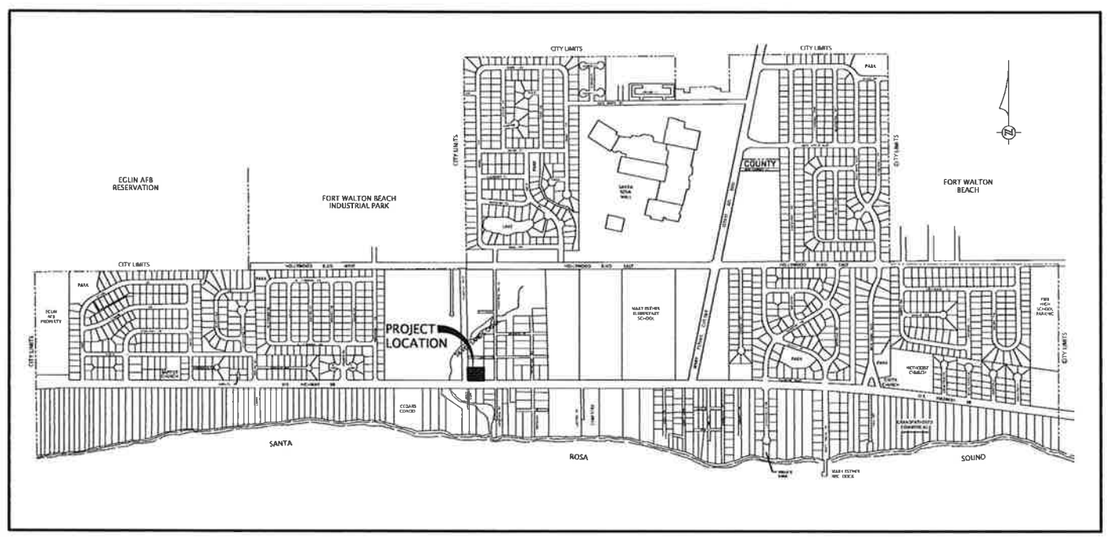

LOCATION MAP
N.T.S.

H.M.M. PROJECT
NO. 332640

CITY MANAGER:
LYNNE OLER

MAYOR:
MARGARET MCLEMORE
COUNCIL MEMBERS:
RON STEARNS - MAYOR PRO TEM
RUTH SYKES
LEE GRIFFIN
DANNY BENNETT
JAMES W. KITCHENS, JR

DRAWING INDEX

G1.0	GENERAL NOTES
C1.0	PROJECT AREA DEMOLITION AND PROPOSED PLAN
C1.1	PUMP STATION DEMOLITION DETAILS
C2.0	PUMP STATION SITE PLAN
C3.0	PROPOSED GRAVITY SEWER PROFILE
PS1.0	PUMP STATION PLAN VIEW
PS1.1	PUMP STATION SECTIONS AND DETAILS
STD1.0	STANDARD DETAILS
STD2.0	STANDARD DETAILS
STD3.0	STANDARD DETAILS
E1.0	PUMP STATION CLASSIFICATION PLAN
E2.0	PUMP STATION ELECTRICAL PLAN
E3.0	PUMP STATION ONE-LINE DIAGRAM
E4.0	PUMP STATION PANEL
E5.0	PUMP STATION PANEL
SK-6	PUMP STATION PANEL

Hatch Mott MacDonald

Hatch Mott MacDonald Florida, LLC

Architects Engineers Surveyors
AA - C0000035 EB - 0000155 LB - 0006783
11-C West 23rd Street
Panama City, Florida 32405
Telephone: (850) 763-9393 ¤ Fax: (850) 763-9396

FUNDING SUBMITTAL

AMIR ZAFAR, PE
FLORIDA CERTIFICATION NO. 56829

MARY ESTHER MAIN LIFT STATION REPLACEMENT 332640

GENERAL NOTES:

1. THE EXACT LOCATION AND ELEVATION OF EXISTING STRUCTURES, UTILITIES, AND PIPING SHALL BE PHYSICALLY VERIFIED IN THE FIELD BY THE CONTRACTOR BEFORE CONSTRUCTION BEGINS. THESE DRAWINGS DO NOT PURPORT TO SHOW IN COMPLETE DETAIL ALL EXISTING STRUCTURES, UTILITIES, OR PIPING.

2. THE CONTRACTOR SHALL EXAMINE ALL AVAILABLE RECORDS AND MAKE ALL EXPLORATIONS AND EXCAVATIONS AS REQUIRED TO DETERMINE THE LOCATION OF EXISTING STRUCTURES, UTILITIES, AND PIPING, WHENEVER NECESSARY. THE OWNER RESERVES THE RIGHT TO CHANGE LOCATION OF LINES TO AVOID CONFLICT WITH EXISTING STRUCTURES, UTILITIES, OR PIPING. THE CONTRACTOR SHALL CHECK PLANS FOR CONFLICTS AND DISCREPANCIES PRIOR TO CONSTRUCTION. THE CONTRACTOR SHALL NOTIFY THE OWNER OR OWNER'S ENGINEER OF ANY CONFLICT BEFORE PERFORMING ANY WORK IN THE AFFECTED AREA.

3. THE CONTRACTOR SHALL EXERCISE EXTREME CAUTION IN AREAS OF BURIED UTILITIES AND SHALL PROVIDE AT LEAST 48 HOURS NOTICE TO THE VARIOUS UTILITY COMPANIES IN ORDER TO PERMIT MARKING THE LOCATIONS OF EXISTING UNDERGROUND UTILITIES IN ADVANCE OF CONSTRUCTION.

4. THE CONTRACTOR IS RESPONSIBLE FOR REPAIRING ANY DAMAGE TO EXISTING FACILITIES ABOVE OR BELOW GROUND THAT MAY OCCUR AS A RESULT OF WORK CALLED FOR IN THESE CONTRACT DOCUMENTS AT HIS OWN EXPENSE.

5. IT SHALL BE THE RESPONSIBILITY OF THE CONTRACTOR TO LEARN, KNOW, AND COMPLY WITH THE REGULATIONS, ORDINANCES, PERMIT AND INSPECTION REQUIREMENTS OF THE VARIOUS GOVERNMENTAL AGENCIES HAVING JURISDICTION. IT WILL BE THE RESPONSIBILITY OF THE CONTRACTOR TO REVIEW AND COMPLY WITH THE CONDITIONS OF THE VARIOUS PERMITS OF THE GOVERNMENTAL AGENCIES. THE CONTRACTOR SHALL SCHEDULE THE REQUIRED INSPECTIONS AND APPROVALS IN ACCORDANCE WITH THE REQUIREMENTS OF THE PERMIT CONDITIONS. THE CONTRACTOR SHALL NOTIFY THE NECESSARY AGENCIES OF CONSTRUCTION COMMENCEMENT.

6. IT SHALL BE THE CONTRACTOR'S SOLE RESPONSIBILITY TO MAINTAIN ADEQUATE TRAFFIC CONTROL AND TO PROVIDE DETOURS AROUND CONSTRUCTION ACTIVITIES. UNLESS APPROVED BY CITY OF BONIFAY, HOLMES COUNTY, AND FDOT IN WRITING, NO STREET SHALL REMAIN CLOSED TO TRAFFIC OVERNIGHT. IN ADDITION, THE CONTRACTOR SHALL COOPERATE WITH LOCAL RESIDENTS IN GAINING ACCESS TO THEIR HOMES AND BUSINESSES DURING WORKING HOURS AND SHALL ASSIST AT ALL TIMES WHEN VEHICLES EXPERIENCE TROUBLE DUE TO CONSTRUCTION ACTIVITIES. THE CONTRACTOR SHALL SUBMIT A MAINTENANCE OF TRAFFIC PLAN FOR APPROVAL PRIOR TO THE START OF CONSTRUCTION.

7. PRIOR TO COMMENCING CONSTRUCTION, CONTRACTOR SHALL INSTALL ANY REQUIRED SILT FENCING (FDOT INDEX 102) FOR SILT CONTROL. LOCATION SHALL BE AS SHOWN ON THE PLANS OR AS DIRECTED IN THE FIELD.

8. THE CONTRACTOR SHALL INSTALL ALL TRAFFIC CONTROL DEVICES REQUIRED FOR THE PROJECT IN ACCORDANCE WITH THE LATEST EDITION OF THE U.S. DEPARTMENT OF TRANSPORTATION FEDERAL HIGHWAY ADMINISTRATION MANUAL ON UNIFORM TRAFFIC CONTROL DEVICES.

9. ALL EXISTING CONCRETE, ASPHALT, TREES, STUMPS, WASTE MATERIAL, PIPE, AND OTHER DELETERIOUS MATERIAL SHALL BE REMOVED FROM THE SITE AND DISPOSED OF IN ACCORDANCE WITH ALL APPLICABLE LAWS.

10. WHERE PAVEMENT IS TO BE REMOVED AND REPLACED, AS INDICATED ON THE PLANS OR DIRECTED IN THE FIELD, ALL EXISTING MARKINGS AND TRAFFIC LOOPS SHALL ALSO BE REPLACED. THERE WILL BE NO DIRECT PAYMENT FOR THIS WORK. COST SHALL BE INCLUDED IN RELATED ITEMS OF WORK.

11. IN WETLAND AREAS, CREEK CROSSINGS AND WORK AREAS ADJACENT TO WETLAND AREAS AND CREEK CROSSINGS, ETC., THE FOLLOWING PROVISIONS WILL BE PROVIDED:

A. A TURBIDITY CURTAIN OR SILT FENCING AND BALED HAY BARRIERS (FDOT INDEX 102 &103) SHALL BE USED FOR SILT AND SEDIMENTATION CONTROL FROM EXCAVATION OPERATIONS, AND WHERE RUNOFF FROM STOCKPILED SPOIL MATERIAL OR PIPE TRENCH WILL ADVERSELY AFFECT THE TURBIDITY OF THE ADJACENT WETLANDS OR WATERS.

B. A TURBIDITY CURTAIN WILL BE CONSTRUCTED IN ACCORDANCE WITH FDOT STANDARD SPECIFICATIONS FOR ROAD AND BRIDGE CONSTRUCTION, LATEST EDITION, EXCEPT AS AMENDED HEREIN. WITHIN ONE WEEK AFTER THE COMPLETION OF THE PIPELINE, ALL DISTURBED AREAS SHALL BE RESTORED TO EXISTING OR BETTER CONDITION AND SEEDED AND MULCHED IN ACCORDANCE WITH SPECIFICATIONS.

C. ALL EXCAVATED SPOIL MATERIAL SHALL BE PLACED UPLAND OF WETLAND AREAS. SEDIMENT FROM RUNOFF WILL BE CONTROLLED PER NOTES A AND B.

D. WHERE DEWATERING IS REQUIRED FOR INSTALLATION, TURBIDITY IN DISCHARGE FROM DEWATERING SHALL BE CONTROLLED AS PER NOTES A AND B.

E. ADEQUATE VEGETATIVE GROWTH SHALL BE OBTAINED IN THESE AREAS AS QUICKLY AS POSSIBLE TO PREVENT EROSION AND SEDIMENTATION MIGRATION AFTER CONSTRUCTION OPERATION.

12. WHERE IT BECOMES NECESSARY TO TEMPORARILY REMOVE, REPOSITION, OR SUPPORT EXISTING FACILITIES, STORMDRAIN STRUCTURES, UTILITY POLES, ETC., THIS WORK SHALL BE PERFORMED AT THE CONTRACTOR'S EXPENSE AND IN ACCORDANCE WITH REQUIREMENTS OF THE OWNER OF THE EXISTING FACILITY, UTILITY POLE, ETC. THE CONTRACTOR SHALL GIVE PROPER NOTICE TO THE UTILITIES.

13. THE CONTRACTOR SHALL PHYSICALLY EXAMINE THE ENTIRE PROJECT SITE AND INFORM HIMSELF FULLY IN REGARD TO ALL CONDITIONS PERTAINING TO THE PLACE WHERE THE WORK IS TO BE PERFORMED FOR PURPOSE OF DETERMINING HIS COST TO PERFORM THE WORK. THE CONTRACTOR SHOULD PAY SPECIAL ATTENTION TO AREAS INVOLVING CLEARING AND GRUBBING, EXISTING FACILITIES REMOVAL AND REPLACEMENT, SUPPORT ON RELOCATION, AND WORK INVOLVED ADJACENT TO WETLAND AREAS.

14. WHERE IT IS NECESSARY TO CROSS OVER OR UNDER EXISTING FACILITIES, A MINIMUM OF 6" CLEARANCE SHALL BE PROVIDED BETWEEN THE NEW AND EXISTING UTILITY. IT MAY BE NECESSARY AT SUCH LOCATIONS TO PROVIDE DUCTILE IRON PIPE FOR THE NEW UTILITY AND/OR SUPPORT AS SHOWN IN THE PLANS. THIS WORK WILL BE AS DIRECTED IN THE FIELD OR SHOWN ON THE PLANS AND SHALL BE PAID FOR UNDER THE UNIT PRICES BID FOR THE VARIOUS SIZES AND TYPES OF PIPE. THERE SHALL BE NO ADDITIONAL COMPENSATION FOR EXTRA DEPTH REQUIRED TO CROSS UNDER EXISTING FACILITIES.

15. WHEN FORCEMAIN PIPE DEFLECTION IS USED TO CHANGE ALIGNMENT ON GRADE OF PIPE, DEFLECTION SHALL NOT EXCEED 50% OF THE MANUFACTURER'S MAXIMUM RECOMMENDED DEFLECTION.

16. WORK MAY REQUIRE CLEARING AND GRUBBING. THE COST OF THIS WORK SHALL BE INCLUDED IN THE UNIT PRICE BID FOR THE RELATED ITEMS OF WORK.

17. THE CONTRACTOR IS ADVISED THAT GROUNDWATER LEVELS VARY WITH WEATHER CONDITIONS AND SEASONAL CHANGES. THE DEWATERING OR REMOVAL OF WATERS FROM EXCAVATIONS IN THE COURSE OF CONSTRUCTING THIS PROJECT SHALL NOT BE GROUNDS FOR CHANGED CONDITIONS.

18. A RIGHT-OF-WAY SURVEY HAS NOT BEEN PERFORMED. THE CONTRACTOR SHALL NOT TRESPASS ONTO PRIVATE PROPERTY.

19. LOCATIONS AND ELEVATIONS OF EXISTING MANHOLES ARE TO BE VERIFIED BY CONTRACTOR PRIOR TO ORDERING NEW MANHOLES.

20. ALL DISTURBED AREAS SHALL BE SEEDED OR SODDED, AS DIRECTED IN THE FIELD.

21. TOP OF MANHOLES ARE SHOWN APPROXIMATE AND MAY REQUIRE FIELD ADJUSTMENT. THERE SHALL BE NO PAYMENT FOR SUCH WORK

SPECIAL INSTRUCTIONS:

1. NO SANITARY SEWAGE SHALL BE DUMPED, BYPASSED, OR ALLOWED TO OVERFLOW INTO STREETS, STREAMS, DITCHES, CATCH BASINS, STORM DRAINS OR ANY WATER BODIES NOR SHALL IT BE ALLOWED TO "BACK UP" UPSTREAM TO SUCH AN EXTENT THAT HOMES, BUSINESS, ETC., ALONG THE SEWER ARE FLOODED.

   WHEN PUMPING/BYPASSING IS REQUIRED, THE CONTRACTOR SHALL SUPPLY THE NECESSARY PUMPS, CONDUITS, AND OTHER EQUIPMENT TO DIVERT THE FLOW OF SEWAGE AROUND THE MANHOLE STRUCTURES, LINE SECTION OR PUMPING STATION AT WHICH WORK IS TO BE PERFORMED. THE BYPASS SYSTEMS SHALL BE OF SUFFICIENT CAPACITY TO HANDLE EXISTING FLOWS PLUS ADDITIONAL FLOW THAT MAY OCCUR DURING PERIODS OF A RAINSTORM. THE CONTRACTOR WILL BE RESPONSIBLE FOR FURNISHING THE NECESSARY LABOR AND SUPERVISION TO SET UP AND OPERATE THE PUMPING AND BYPASSING SYSTEM. BYPASS SYSTEM SHALL NOT BE LEFT UNATTENDED AT ANY TIME THAT THEY ARE IN OPERATION.

   WHERE PUMP DISCHARGE LINES CROSS STREETS OR ALLEYS, THEY SHALL BE COVERED WITH WOODEN OR METAL RAMPS DESIGNED AND INSTALLED IN SUCH A MANNER THAT THEY DO NOT UNREASONABLY IMPAIR VEHICULAR TRAFFIC TRAVELING SAID STREETS OR ALLEYS. IN ALL PUMPING OR BYPASSING WORK, THE ARRANGEMENT OR LAYOUT OF THE PUMPING AND BYPASSING FACILITIES, AND THE MANHOLES AND SEWER LINES TO BE UTILIZED IN SUCH WORK MUST BE APPROVED BY THE OWNER'S REPRESENTATIVE PRIOR TO THE TIME SAID PUMPING AND BYPASSING WORK IS STARTED. WORK SHALL BE SCHEDULED SUCH THAT ALL BYPASS PUMPING OPERATIONS OCCURS DURING THE WORKDAY. BYPASS PUMPING OPERATION SHALL NOT BE OPERATED AT NIGHT AND ALL SANITARY SEWER SERVICES SHALL BE CONNECTED FOR USE AT THE END OF EACH WORKDAY.

   WHERE IT BECOMES NECESSARY TO INTERRUPT OPERATION OF EXISTING SEWER PUMPING STATIONS, THE CONTRACTOR SHALL COORDINATE THIS WORK WITH THE OWNER.

   NO DIRECT PAYMENT WILL BE MADE FOR PUMPING AND BYPASSING .

2. THE CONTRACTOR SHALL VERBALLY REPORT ALL UNAUTHORIZED RELEASES OR SPILLS OF UNTREATED OR TREATED WASTEWATER TO THE CITY OF BONIFAY AND THE FLORIDA DEPARTMENT OF ENVIRONMENTAL PROTECTION AS SOON AS PRACTICAL, BUT NOT LATER THAN 12 HOURS FROM THE TIME THE CONTRACTOR BECOMES AWARE OF THE DISCHARGE. SPILLS OR RELEASES IN EXCESS OF 1,000 GALLONS PER INCIDENT, OR WHERE PUBLIC HEALTH OR THE ENVIRONMENT MAY BE ENDANGERED, ARE TO BE REPORTED TO THE STATE WARNING POINT AT (800) 320-0519. SPILLS OR RELEASES OF ANY AMOUNT ARE TO BE REPORTED TO THE CITY AT (850) 547-4238 AND FDEP AT (850) 872-4375. THE CONTRACTOR, TO THE EXTENT KNOWN, WILL PROVIDE THE FOLLOWING INFORMATION TO THE CITY, STATE WARNING POINT AND DEP BRANCH OFFICE:

   A. NAME, ADDRESS AND TELEPHONE NUMBER OF PERSON REPORTING.
   B. NAME, ADDRESS AND TELEPHONE NUMBER OF RESPONSIBLE PERSON FOR THE DISCHARGE.
   C. DATE AND TIME OF THE DISCHARGE AND STATUS OF THE DISCHARGE (ONGOING OR CEASED).
   D. CHARACTERISTICS OF THE WASTEWATER SPILLED OR RELEASED (UNTREATED OR TREATED, INDUSTRIAL OR DOMESTIC).
   E. ESTIMATED AMOUNT OF THE DISCHARGE.
   F. LOCATION OR ADDRESS OF THE DISCHARGE.
   G. WHETHER THE DISCHARGE WAS CONTAINED ON-SITE AND CLEANUP ACTIONS TAKEN.
   H. DESCRIPTION OF AREA AFFECTED BY THE DISCHARGE, INCLUDING NAME OF ANY WATER BODY.
   I. OTHER PERSONS OR AGENCIES CONTACTED.

   IN ADDITION, A WRITTEN REPORT SHALL BE PROVIDED TO THE CITY, FDEP AND OTHER AFFECTED AGENCIES ON FORMS PROVIDED BY THE CITY NOT LATER THAN 72 HOURS FOLLOWING THE DISCHARGE. ALL NOTIFICATIONS SHALL COMPLY WITH THE PROVISIONS OF ANY APPLICABLE PERMITS WHICH MAY APPLY TO THE PROJECT AND SHALL BE IN ACCORDANCE WITH RULE 62-604.550, F.A.C.

3. THE CONTRACTOR SHALL BE SOLELY LIABLE FOR ANY FDEP PENALTIES, FINES OR ACTIONS RESULTING FROM ANY UNPERMITTED WASTEWATER DISCHARGE AND/OR THE FAILURE TO PROVIDE PROPER NOTICE ACCORDING TO THE ABOVE REQUIREMENTS.

CALL BEFORE YOU DIG
DIAL 811
www.callsunshine.com

FUNDING SUBMITTAL

Hatch Mott MacDonald
Hatch Mott MacDonald Florida, LLC
Architects Engineers Surveyors
AA - C000053 EB - 9000155 LB - 0000753
11-C West 23rd Street
Panama City, Florida 32405
Telephone: (850) 763-6595 • Fax: (850) 763-5356

MAIN LIFT STATION REPLACEMENT
MARY ESTHER, FL

REVISION DESCRIPTION	DATE	REV.

DATE: 05/2015
DESIGNED BY:
DRAWN BY: R.SHAMAGHAN
PROJECT PROFESSION: Z.WORLEY
PROJECT MANAGER: A.ZAFAR
HMM PROJECT NUMBER: 332840

FLORIDA LICENSE NO.

DATE

SHEET TITLE:
GENERAL NOTES

SHEET NUMBER:
G1.0

This drawing is the property of Hatch Mott MacDonald Florida, LLC, and may not be reproduced without written permission.

This document should not be relied on or used in circumstances other than those for which it was originally prepared and for which Hatch Mott MacDonald was commissioned. Hatch Mott MacDonald accepts no responsibility for this document to any party other than the person by whom it was commissioned.

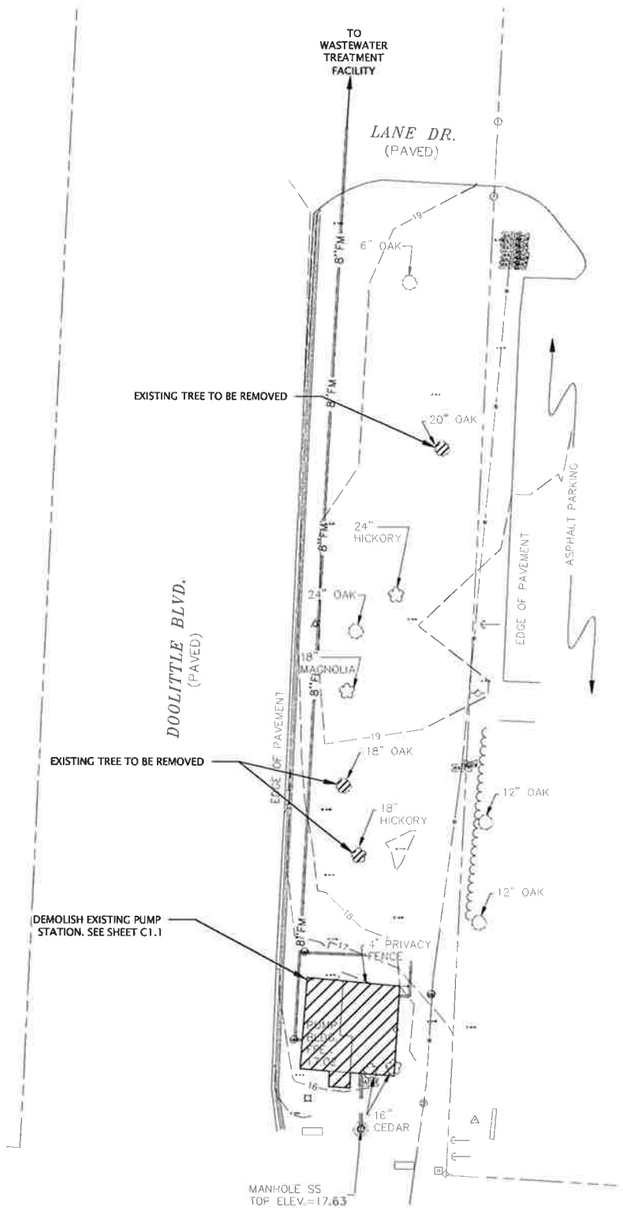

EXISTING PROJECT AREA SURVEY AND DEMOLITION PLAN

SCALE: 1"=20'

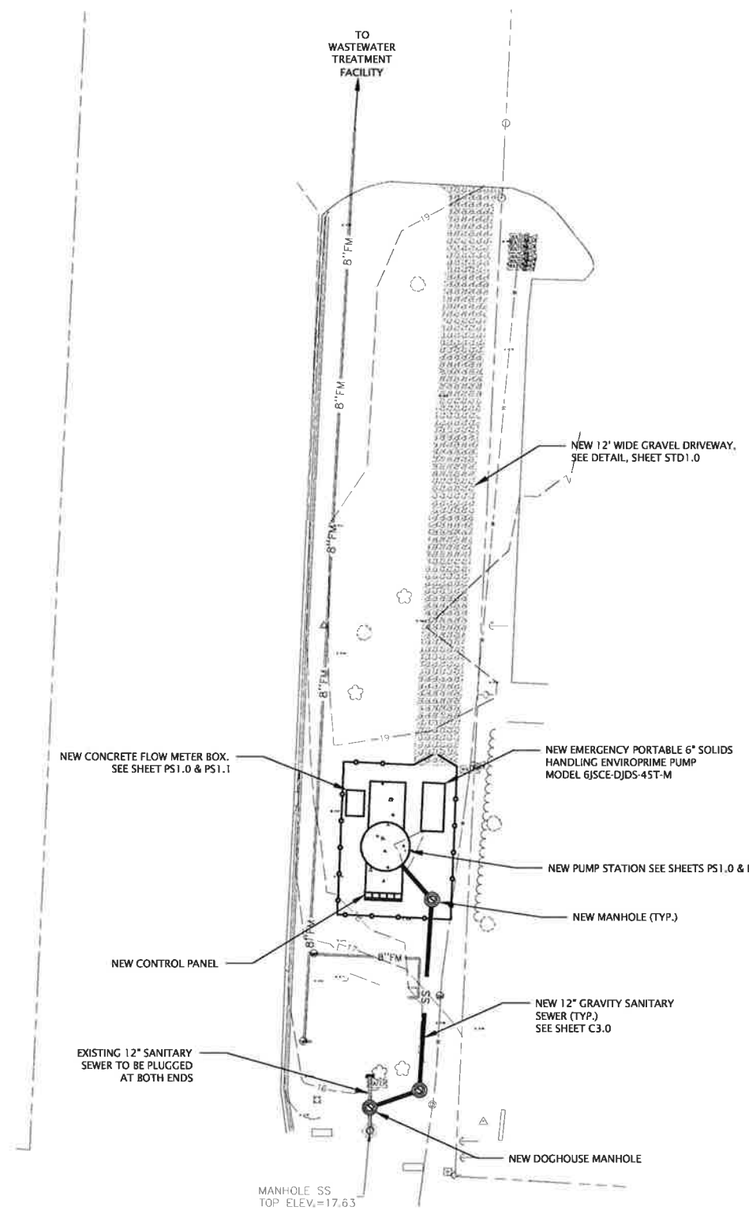

PROPOSED PROJECT AREA PLAN

SCALE: 1"=20'

LEGEND

- RIGHT-OF-WAY
- EXISTING GUY WIRE
- EXISTING UTILITY POLE
- EXISTING WATER VALVE
- EXISTING FORCE MAIN VALVE
- 8"FM — EXISTING FORCE MAIN
- EXISTING WATER LINE
- W — NEW WATER LINE
- NEW CHAIN LINK FENCE
- SS — NEW SANITARY SEWER
- NEW CONCRETE
- DEMOLITION

GRAPHIC SCALE

0 20 40 FT

FUNDING SUBMITTAL

N

Hatch Mott MacDonald
Hatch Mott MacDonald Florida, LLC
Architects Engineers Surveyors
AA - C000035 EB - 0000155 LB - 0006783
120 Richard Jackson Blvd., Suite 160
Panama City, Florida (32407-2512)
Telephone: (850) 235-5831 • Fax: (850) 234-1552

MAIN LIFT STATION REPLACEMENT
MARY ESTHER, FL

REVISION DESCRIPTION	DATE	REV.

DATE: 05/2015
DESIGNED BY: Z.WORLEY
DRAWN BY: Z.WORLEY
PROJECT PROFESSION: Z.WORLEY
PROJECT MANAGER: A.ZAFAR
H.M.M. PROJECT NUMBER: 332640

FLORIDA LICENSE NO.
DATE

SHEET TITLE:
PROJECT AREA DEMOLITION & PROPOSED PLAN

SHEET NUMBER:
C1.0

This drawing is the property of Hatch Mott MacDonald Florida, LLC, and may not be reproduced without written permission.

This document should not be relied on or used in circumstances other than those for which it was originally prepared and for which Hatch Mott MacDonald was commissioned. Hatch Mott MacDonald accepts no responsibility for this document to any party other than the person by whom it was commissioned.

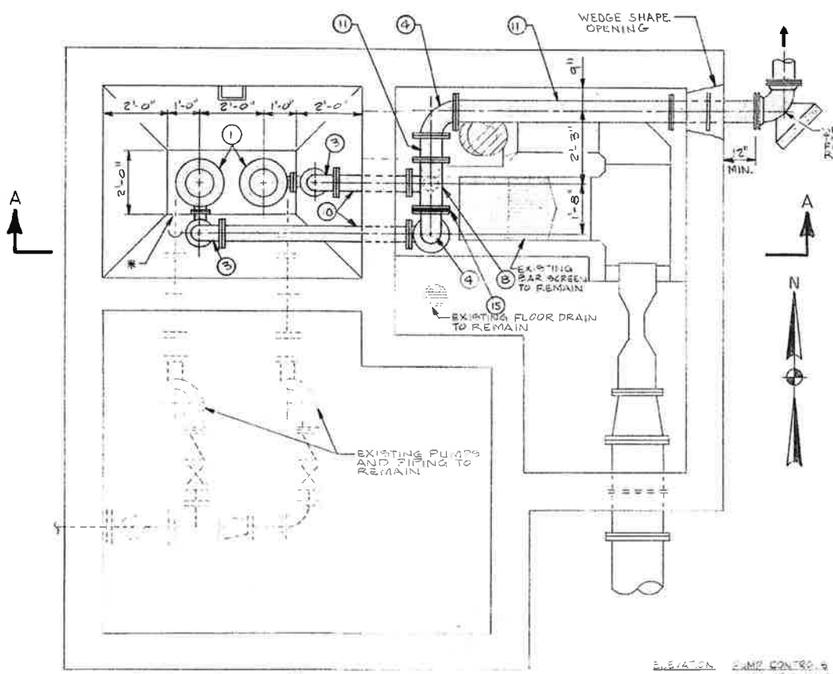

* NOTE: REMOVE EXIST. 4" C.I. SUCTION LINES FLUSH WITH BOTTOM SLAB.

PUMP AND PIPING PLAN

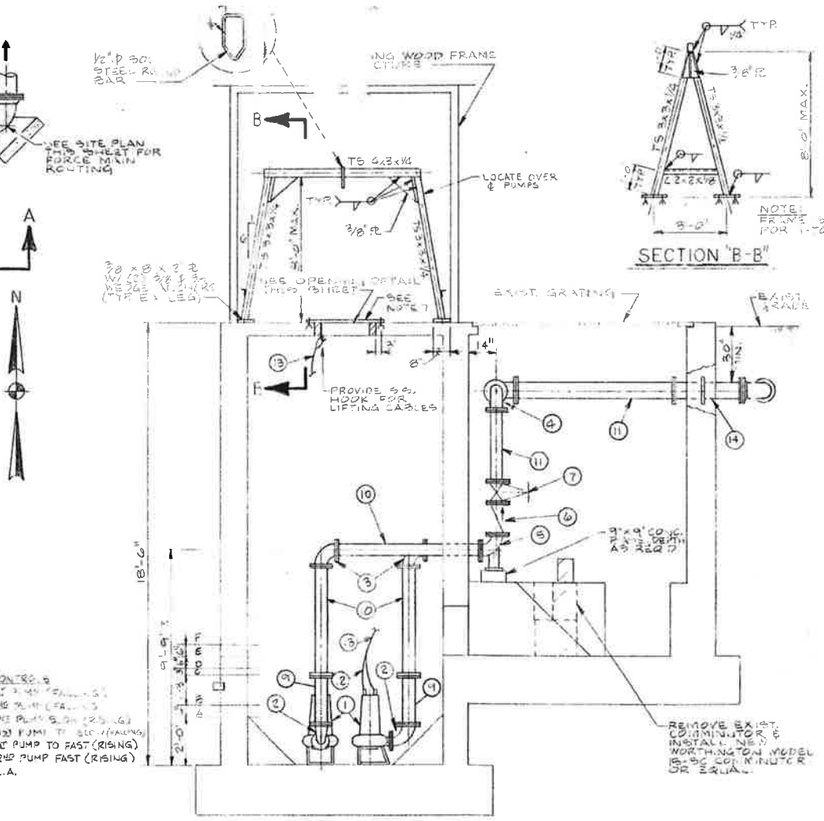

ELEVATION	PUMP CONTROLS
A	STOP 1ST PUMP (FALLING)
B	STOP 2ND PUMP (FALLING)
C	START 1ST PUMP SLOW (RISING)
D	RESET 1ST PUMP TO SLOW (FALLING)
E	SHIFT 1ST PUMP TO FAST (RISING)
F	START 2ND PUMP FAST (RISING) AND H.L.A.

SECTION "A-A"

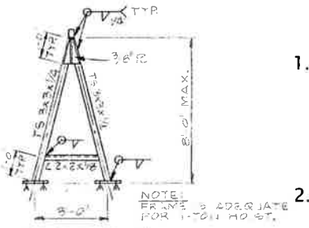

SECTION "B-B"

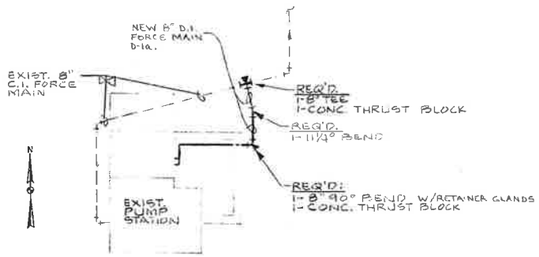

SITE PLAN

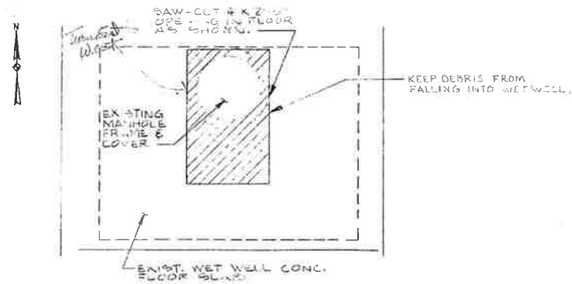

OPENING DETAIL

GENERAL NOTES

1. ALL EQUIPMENT AND PIPING REMOVED FROM PUMP STATION SHALL BE DELIVERED TO THE MARY ESTHER SEWAGE TREATMENT PLANT.
2. THE FLOW OF SEWAGE MUST BE MAINTAINED AT ALL TIMES BY THE CONTRACTOR. NO AADDITIONAL PAYMENT WILL BE MADE FOR BY-PASS PUMPING BUT SHALL BE INCLUDED IN LUMP SUM PRICE BID FOR UPGRADING EXISTING PUMP STATION
3. WET WELL SHALL BE DRAINED AND THOROUGHLY CLEANED OF GREASE AND DEBRIS PRIOR TO DEMOLITION

NOT TO SCALE

GENERAL NOTE:
THESE DRAWINGS ARE PROVIDED TO GIVE THE CONTRACTOR A GENERAL IDEA OF THE EXISTING CONSTRUCTION. THE DRAWINGS REPRESENT THE BEST ESTIMATION OF THE EXISTING SYSTEM/BUILDING CONFIGURATION. MINOR DEVIATIONS OR DIFFERENCES IN THE FIELD FROM THESE PLANS SHALL NOT BE CONSIDERED AS GROUNDS FOR CLAIMS DUE TO CHANGED CONDITIONS.

FUNDING SUBMITTAL

Hatch Mott MacDonald
Hatch Mott MacDonald Florida, LLC
Architects Engineers Surveyors
AA - C000035 EB - 0000155 LB - 0006783
120 Richard Jackson Blvd., Suite 160
Panama City, Florida (32407-2512)
Telephone: (850) 236-5831 ▪ Fax: (850) 234-1952

CITY OF MARY ESTHER MAIN LIFT STATION RELOCATION

DATE	REV.	REVISION DESCRIPTION

DATE: 05/2015
DESIGNED: Z WORLEY
DRAWN BY: Z WORLEY
PROFESSION: Z WORLEY
PROJECT MANAGER: A ZAFAR
H.M.M. PROJECT NUMBER: 332840

FLORIDA LICENSE NO.
DATE

SHEET TITLE:
PUMP STATION DEMOLITION DETAILS

SHEET NUMBER:
C1.1

This document should not be relied on or used in circumstances other than those for which it was originally prepared and for which Hatch Mott MacDonald was commissioned. Hatch Mott MacDonald accepts no responsibility for this document to any party other than the person by whom it was commissioned.
This drawing is the property of Hatch Mott MacDonald Florida, LLC, and may not be reproduced without written permission.

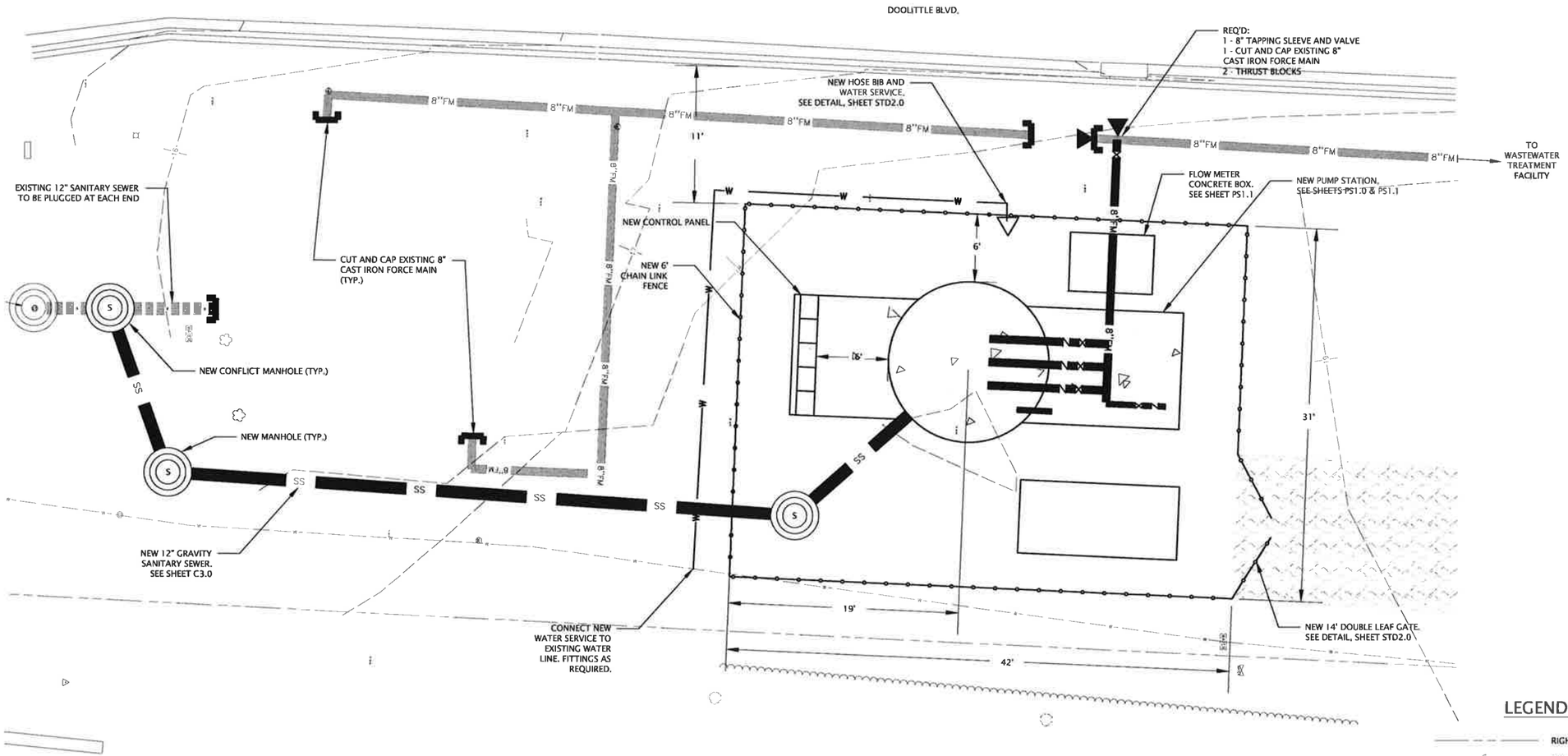

PROPOSED SITE AND PIPING PLAN

SCALE: 1"=5'

LEGEND

- RIGHT-OF-WAY
- EXISTING GUY WIRE
- EXISTING UTILITY POLE
- EXISTING WATER VALVE
- EXISTING FORCE MAIN VALVE
- 8"FM — EXISTING FORCE MAIN
- EXISTING WATER LINE
- W — NEW WATER LINE
- NEW CHAIN LINK FENCE
- SS — NEW SANITARY SEWER
- NEW CONCRETE

FUNDING SUBMITTAL

Hatch Mott MacDonald
Hatch Mott MacDonald Florida, LLC
Architects Engineers Surveyors
AA - C000035 EB - 0000155 LB - 0006783
120 Richard Jackson Blvd., Suite 160
Panama City, Florida (32407-2512)
Telephone: (850) 235-3831 • Fax: (850) 234-1852

MAIN LIFT STATION REPLACEMENT
MARY ESTHER, FL

REVISION DESCRIPTION	DATE	REV.

DATE: 05/2015
DESIGNED BY: Z.WORLEY
DRAWN BY: Z.WORLEY
PROJECT PROFESSION: Z.WORLEY
PROJECT MANAGER: A.ZAFAR
H.M.M. PROJECT NUMBER: 332840

FLORIDA LICENSE NO.
DATE

SHEET TITLE:
PUMP STATION SITE PLAN

SHEET NUMBER:
C2.0

This drawing is the property of Hatch Mott MacDonald Florida, LLC, and may not be reproduced without written permission.

This document should not be relied on or used in circumstances other than those for which it was originally prepared and for which Hatch Mott MacDonald was commissioned. Hatch Mott MacDonald accepts no responsibility for this document to any party other than the person by whom it was commissioned.

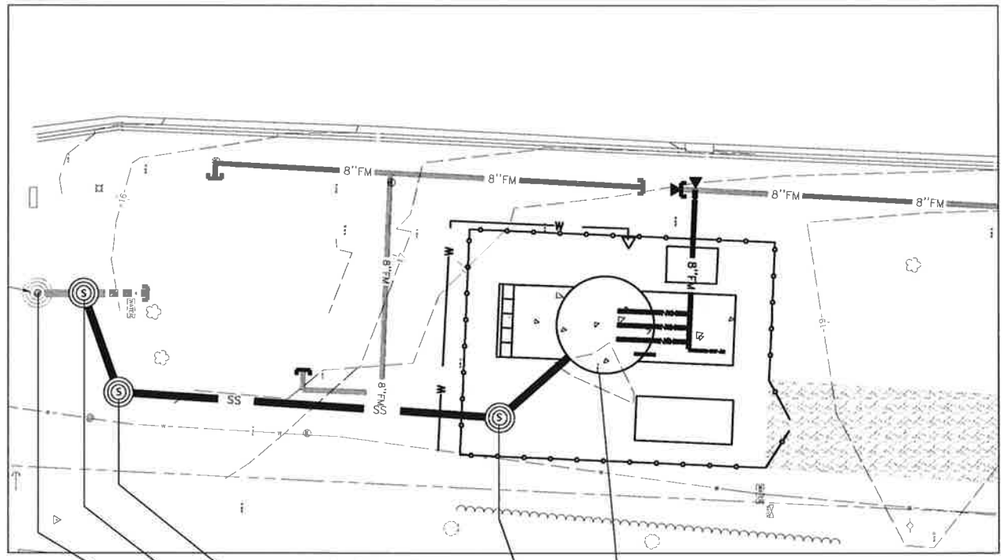

PROPOSED SANITARY SEWER PLAN
HORIZONTAL SCALE: 1"=10'

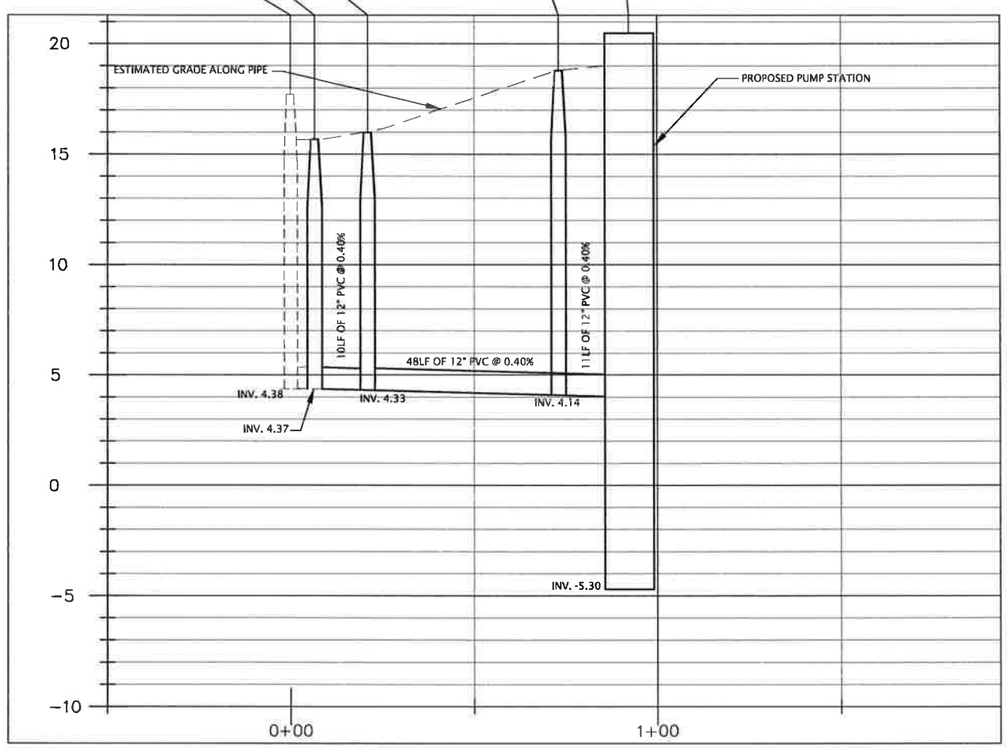

PROPOSED SANITARY SEWER PROFILE
VERTICAL SCALE: 1"=5'
HORIZONTAL SCALE: 1"=20'

LEGEND

- RIGHT-OF-WAY
- EXISTING GUY WIRE
- EXISTING UTILITY POLE
- EXISTING WATER VALVE
- EXISTING FORCE MAIN VALVE
- 8"FM — EXISTING FORCE MAIN
- EXISTING WATER LINE
- W — NEW CHAIN LINK FENCE
- NEW SANITARY SEWER
- SS — NEW CONCRETE

GRAPHIC SCALE
0 10 20 FT

FUNDING SUBMITTAL

Hatch Mott MacDonald
Hatch Mott MacDonald Florida, LLC
Architects Engineers Surveyors
AA - C0000035 EB - 0000155 LB - 0006783
120 Richard Jackson Blvd., Suite 150
Panama City, Florida 32407-7021
Telephone: (850) 235-5051 Fax: (850) 234-1952

MAIN LIFT STATION REPLACEMENT
MARY ESTHER, FL

REVISION DESCRIPTION	REV.	DATE

DATE:	05/2015
DESIGNED BY:	Z.WORLEY
DRAWN BY:	Z.WORLEY
PROJECT PROFESSION	Z.WORLEY
PROJECT MANAGER:	A.ZAFAR
H.M.M. PROJECT NUMBER:	332840

SIGNED AMIR ZAFAR
P.E. LICENSE NUMBER 82329
DATE

SHEET TITLE:
PROPOSED GRAVITY SEWER PROFILE

SHEET NUMBER:
C3.0

This drawing is the property of Hatch Mott MacDonald Florida, LLC, and may not be reproduced without written permission.

This document should not be relied on or used in circumstances other than those for which it was originally prepared and for which Hatch Mott MacDonald was commissioned. Hatch Mott MacDonald accepts no responsibility for this document to any party other than the person by whom it was commissioned.

GENERAL NOTES

1. CONSTRUCTION OF PUMP STATION SHOWN WILL REQUIRE SHEETING TO PROTECT ADJACENT STRUCTURES. CONTRACTOR MAY, AT ITS OWN DISCRETION, EXCAVATE THE PUMP STATION FROM THE CENTER. THICKENED BOTTOM SLAB WILL BE REQUIRED TO AVOID FLOTATION. CONTRACTOR TO SUBMIT FLOATATION CALCULATIONS SIGNED AND SEALED BY A PROFESSIONAL ENGINEER IN THE STATE OF FLORIDA. ALL COST ASSOCIATED WITH RETAINING SERVICES OF ENGINEER AND THICKENING OF SLAB SHALL BE INCLUDED IN THE PUMP STATION COST. THERE SHALL BE NO ADDITIONAL PAYMENT FOR SUCH WORK.
2. ALL EXTERIOR EXPOSED PIPING AND FITTINGS SHALL BE FLANGED DUCTILE IRON WITH PROTECTO 401 INTERIOR EPOXY LINING. ALL INTERIOR PIPING AND FITTINGS SHALL BE CLASS 125 SCHEDULE 40 TYPE 316L STAINLESS STEEL.
3. ALL BURIED PIPING SHALL BE MECHANICAL JOINT DUCTILE IRON WITH PROTECTO 401 INTERIOR EPOXY LINING; ALL MECHANICAL JOINTS SHALL HAVE SET-SCREW TYPE RETAINER GLANDS.
4. ALL BOLTS FOR FITTINGS SHALL BE 316I STAINLESS STEEL.
5. PUMP ALIGNMENT IN SUMP MAY BE VARIED TO SUIT INSTALLATION AND SHALL BE IN ACCORDANCE WITH MANUFACTURER'S RECOMMENDATION.
5. ALL ALUMINUM IN CONTACT WITH CONCRETE SHALL BE COATED WITH BITUMASTIC MEETING ASTM D491.
6. VALVE SIZES SHALL BE THE SAME AS DISCHARGE PIPING.
7. ALL MISCELLANEOUS METAL IN WET WELL SHALL BE TYPE 6063-T6 ALUMINUM OR 316L S.S.
8. ALUMINUM ACCESS COVERS SHALL BE EQUIPPED WITH AN EXTERNALLY OPERATED LOCKING DEVICE TO PREVENT OPENING OF COVER BY UNAUTHORIZED PERSONS. IF LOCKING DEVICE IS KEYED ALL STATIONS SHALL BE KEYED ALIKE. COVERS SHALL BE MINIMUM 1/4" THICK DIAMOND PATTERN ALUMINUM REINFORCED TO SUPPORT A LIVE LOAD OF 150 PSF, MINIMUM. HINGES, BOLTS AND FASTENERS SHALL BE STAINLESS STEEL. THE ACCESS COVER SHALL HAVE A POSITIVE LOCKING ARM TO HOLD THE DOOR IN AN OPEN POSITION WHEN NECESSARY.
9. GUIDE RAIL FOR FLOAT SWITCH (SEPARATE FROM PUMP GUIDE RAIL) SHALL BE MOUNTED SUCH THAT IT DOES NOT INTERFERE WITH OR NEED TO BE REMOVED FOR PUMP REMOVAL.
10. EMERGENCY CONTACT SIGN: A SIGN MADE OF DURABLE WEATHER RESISTANT MATERIAL SHALL BE POSTED AT A LOCATION VISIBLE TO THE PUBLIC WITH A TELEPHONE NUMBER FOR A POINT OF CONTACT IN CASE OF EMERGENCY. THE CONTRACTOR WILL BE RESPONSIBLE FOR COORDINATION WITH THE OWNER REGARDING THE PHONE NUMBER TO BE USED.
11. CONTRACTOR SHALL WARRANT THE COMPONENTS AND INSTALLATION THEREOF ARE IN FULL COMPLIANCE WITH FLORIDA DEPARTMENT OF ENVIRONMENTAL PROTECTION (FDEP) REQUIREMENTS.
12. AN ALARM HORN AND LIGHT SHALL BE PROVIDED WITH A BATTERY BACK-UP CAPABEL OF SUPPLYING POWER TO THE LIGHT AND HORN FOR A MINIMUM OF 2 HOURS.
13. ALARM SHALL ACTIVATE UNDER HIGH LIQUID LEVEL CONDITION OR LOSS OF POWER. PROVIDE PUSH TO SILENCE AND RESET BUTTON FOR ALARM.

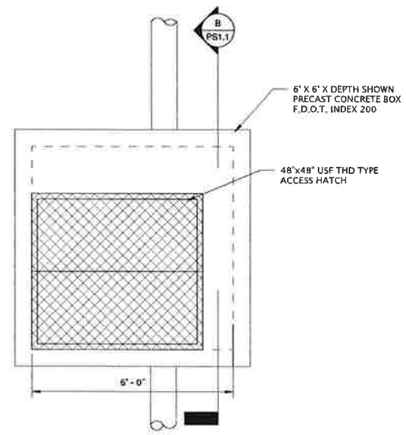

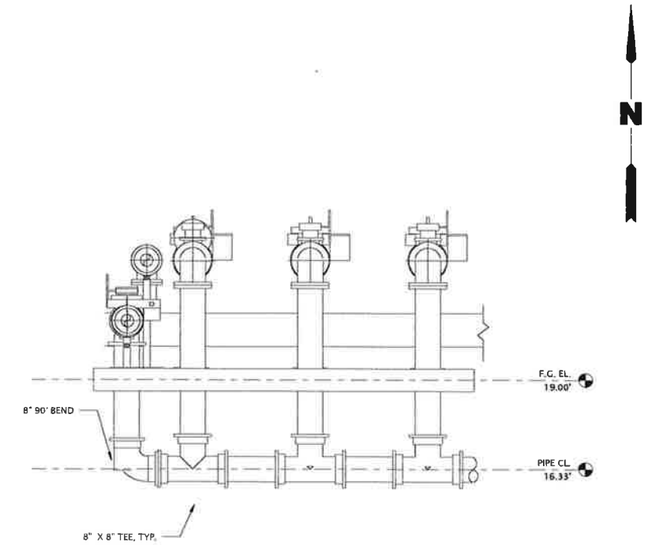

SECTION D
N.T.S.

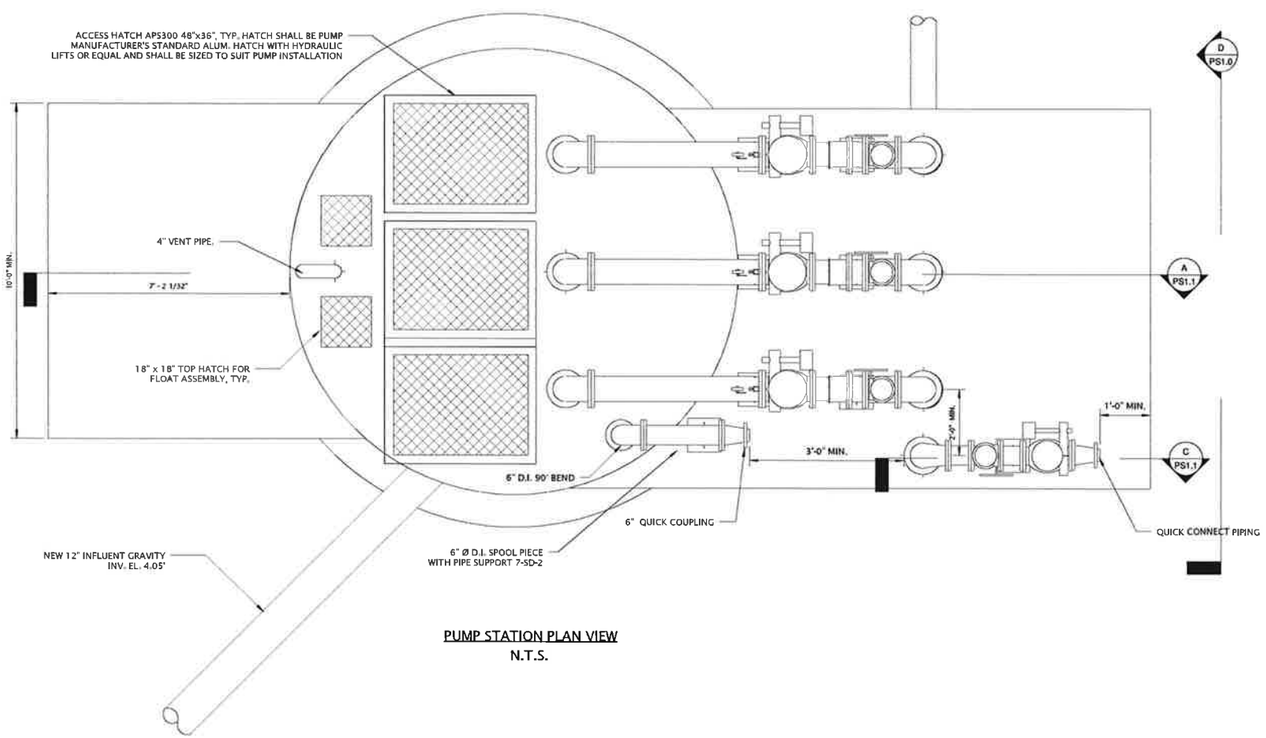

PUMP STATION PLAN VIEW
N.T.S.

FUNDING SUBMITTAL

Hatch Mott MacDonald
Hatch Mott MacDonald Florida, LLC
Architects Engineers Surveyors
AA - C0000035 EB - 0000155 LB - 0006783
120 Richard Jackson Blvd., Suite 180
Panama City Beach, Florida 32407
Telephone: (850) 236-5831 • Fax: (850) 234-1952

MAIN LIFT STATION REPLACEMENT
MARY ESTHER, FL

DATE	REV.	REVISION DESCRIPTION

DATE: 10/2010
DESIGNED BY: Z.WORLEY
DRAWN BY: Z.WORLEY
PROJECT ENGINEER: Z.WORLEY
PROJECT MANAGER: A. ZAFAR
HMM PROJECT NUMBER: 332640

Amir Zafar
FLORIDA LICENSE NO. 56829
DATE

SHEET TITLE:
PUMP STATION PLAN VIEW

SHEET NUMBER:
PS1.0

This document should not be relied on or used in circumstances other than those for which it was originally prepared and for which Hatch Mott MacDonald was commissioned. Hatch Mott MacDonald accepts no responsibility for this document to any party other than the person by whom it was commissioned.

This drawing is the property of Hatch Mott MacDonald Florida, LLC, and may not be reproduced without written permission.

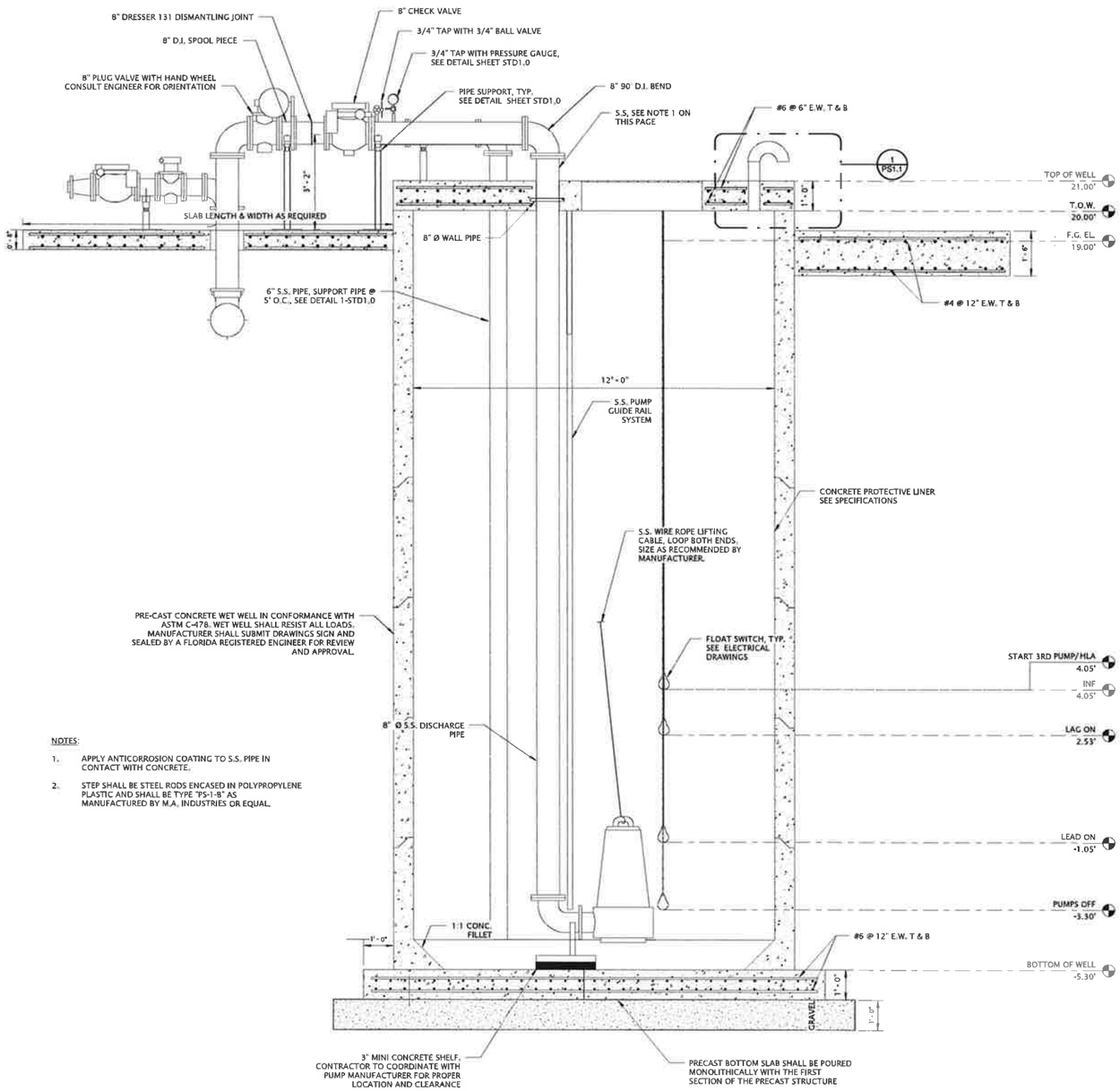

SECTION A

N.T.S.

NOTES:

1. APPLY ANTICORROSION COATING TO S.S. PIPE IN CONTACT WITH CONCRETE.
2. STEP SHALL BE STEEL RODS ENCASED IN POLYPROPYLENE PLASTIC AND SHALL BE TYPE "PS-1-8" AS MANUFACTURED BY M.A. INDUSTRIES OR EQUAL.

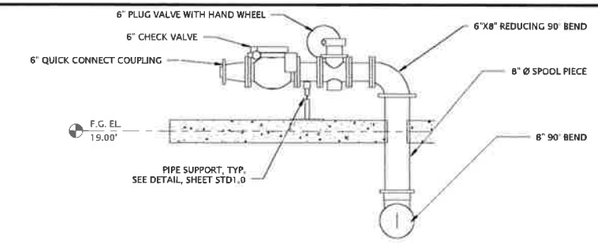

SECTION C

N.T.S.

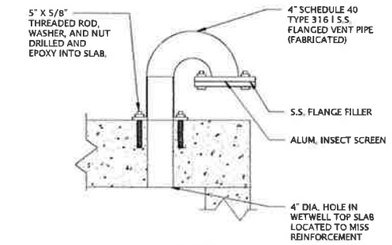

DETAIL 1

N.T.S.

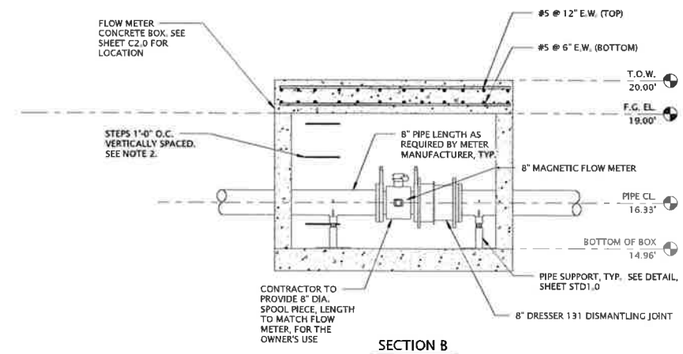

SECTION B

N.T.S.

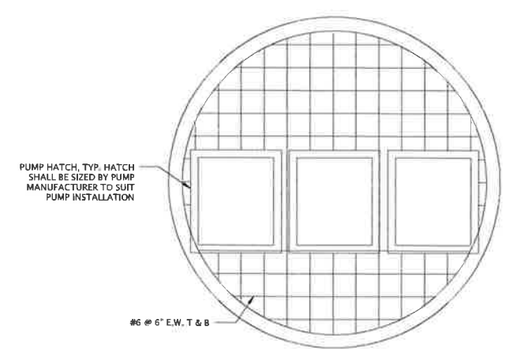

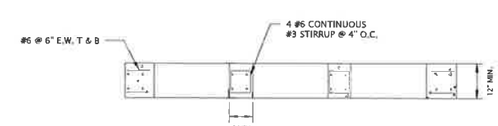

PUMP STATION TOP SLAB DETAIL

N.T.S.

FUNDING SUBMITTAL

Hatch Mott MacDonald
Hatch Mott MacDonald Florida, LLC
Architects Engineers Surveyors
AA - C0000035 EB - 0000155 LB - 0006783
120 Richard Jackson Blvd. | Suite 180
Panama City Beach, Florida 32407-2
Telephone: (850) 238-5931 • Fax: (850) 234-1952

MAIN LIFT STATION REPLACEMENT
MARY ESTHER, FL

REVISION DESCRIPTION	DATE	REV.

DATE:	10/2010
DESIGNED BY:	Z.WORLEY
DRAWN BY:	Z.WORLEY
PROJECT ENGINEER:	Z.WORLEY
PROJECT MANAGER:	A. ZAFAR
HMM PROJECT NUMBER:	332640

Amir Zafar
FLORIDA LICENSE NO. 55829
DATE

SHEET TITLE:

PUMP STATION SECTIONS AND DETAILS

SHEET NUMBER:

PS1.1

This document should not be relied on or used in circumstances other than those for which it was originally prepared and for which Hatch Mott MacDonald was commissioned. Hatch Mott MacDonald accepts no responsibility for this document to any party other than the person by whom it was commissioned.

This drawing is the property of Hatch Mott MacDonald Florida, LLC, and may not be reproduced without written permission.

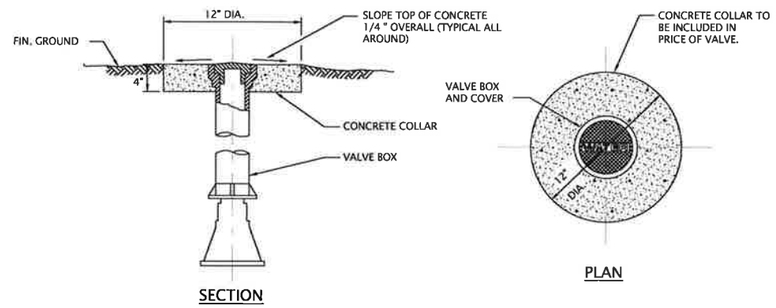

VALVE BOX COLLAR DETAIL

N.T.S.

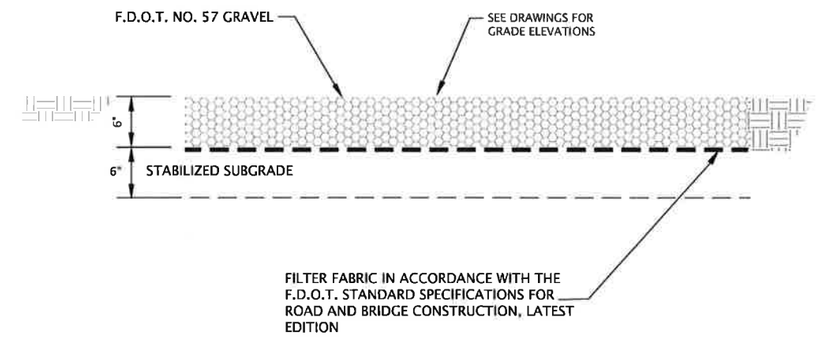

GRAVEL DRIVEWAY DETAIL

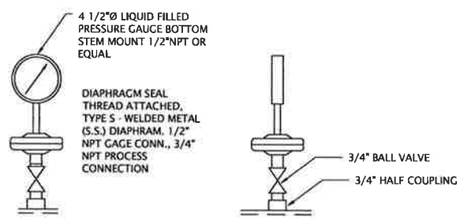

PRESSURE GAUGE

N.T.S.

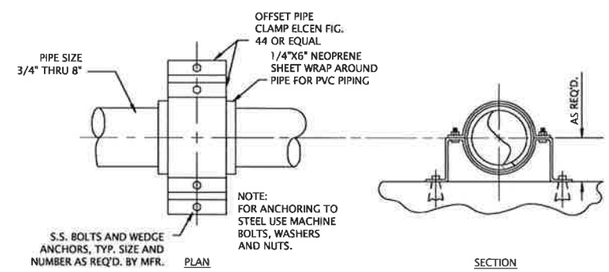

PIPE SUPPORT

N.T.S. (1 / STD1.0)

PIPE JOINT RESTRAINT TABULATION - WATER MAIN

(ALL RESTRAINT JOINT LENGTHS SHOWN ARE IN FEET)

SOURCE: EBBA RESTRAINED JOINT LENGTH PROGRAM VERSION 4.0

HORIZONTAL BENDS

EVERY JOINT WITHIN THE LENGTH SPECIFIED BELOW (IN FEET) SHALL BE RESTRAINED ON BOTH SIDES OF THE FITTING

PIPE SIZE AND TYPE	90 Deg.	45 Deg.	22.5 Deg.	11.25 Deg.	DEAD END/PLUG
3" PVC	18	7	4	2	40
4" PVC	22	9	4	2	48
6" PVC	30	13	6	3	68
8" PVC	40	16	8	4	89
10" PVC	47	19	9	5	106
12" PVC	55	23	11	5	125
14" PVC	62	26	12	6	143
16" PVC	70	29	14	7	161
18" PVC	77	32	15	8	179
20" PVC	84	35	17	8	195
24" PVC	96	40	19	10	228

SMALLER PIPE SIZE		3"	4"	6"	8"	10"	12"	14"	16"	18"	20"
REDUCER (LARGER PIPE RESTRAINT)	3"	-	-	-	-	-	-	-	-	-	-
	4"	15	-	-	-	-	-	-	-	-	-
	6"	45	35	-	-	-	-	-	-	-	-
	8"	72	64	37	-	-	-	-	-	-	-
	10"	93	86	65	36	-	-	-	-	-	-
	12"	114	109	91	66	61	-	-	-	-	-
	14"	133	129	114	93	89	37	-	-	-	-
	16"	153	140	136	118	114	68	37	-	-	-
	18"	171	168	156	140	132	97	69	36	-	-
	20"	189	186	175	161	158	122	97	69	36	-

PIPE RUN SIZE		3"	4"	6"	8"	10"	12"	14"	16"	18"	20"
TEE (BRANCH RESTRAINT)	3"	21	-	-	-	-	-	-	-	-	-
	4"	17	29	-	-	-	-	-	-	-	-
	6"	7	20	47	-	-	-	-	-	-	-
	8"	1	12	42	69	-	-	-	-	-	-
	10"	1	2	35	64	84	-	-	-	-	-
	12"	1	1	29	59	80	102	-	-	-	-
	14"	1	1	22	54	76	98	118	-	-	-
	16"	1	1	15	48	72	95	115	135	-	-
	18"	1	1	7	43	67	91	112	113	151	-
	20"	1	1	1	37	62	87	109	130	149	168

NOTES :
1. TEST PRESSURE=150 PSI, SOIL GROUP=SM, TRENCH TYPE=2.5, DEPTH=3, SAFETY FACTOR=1.5
2. RESTRAINED LENGTHS FOR VERTICAL OFFSETS MUST BE INDIVIDUALLY CALCULATED.
3. MINIMUM PIPE LENGTH ALONG TEE RUN=5FEET OR LARGER.
4. ALWAYS ROUND UP PARTIAL LENGTHS TO THE NEXT PIPE JOINT.

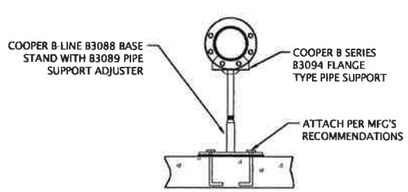

PIPE SUPPORT 2

N.T.S.

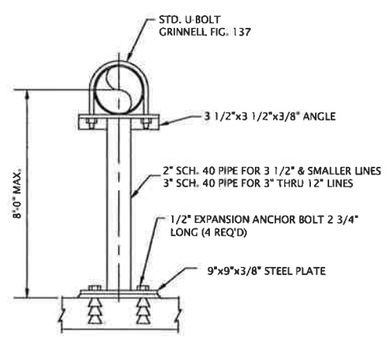

PIPE SUPPORT 1

N.T.S.

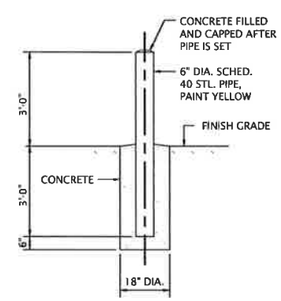

GUARD POST

N.T.S. (2 / STD1.0)

FUNDING SUBMITTAL

Hatch Mott MacDonald
Hatch Mott MacDonald Florida, LLC
Architects Engineers Surveyors
AA - C00000135 EB - 0000155 LB - 0006783
11-C West 23rd Street
Panama City, Florida 32405
Telephone: (850) 763-5386 • Fax: (850) 763-5386

MAIN LIFT STATION REPLACEMENT
MARY ESTHER, FL

REVISION DESCRIPTION

REV.	DATE

DATE: 05/2015
DESIGNED BY:
DRAWN BY: R.SHANAGHAN
PROJECT ENGINEER: Z.WORLEY
PROJECT MANAGER: A.ZAFAR
H.M.M. PROJECT NUMBER: 332640

FLORIDA LICENSE NO.
DATE

SHEET TITLE:
STANDARD DETAILS

SHEET NUMBER:
STD1.0

This drawing is the property of Hatch Mott MacDonald Florida, LLC, and may not be reproduced without written permission.

This document should not be relied on or used in circumstances other than those for which it was originally prepared and for which Hatch Mott MacDonald was commissioned. Hatch Mott MacDonald accepts no responsibility for this document to any party other than the person by whom it was commissioned.

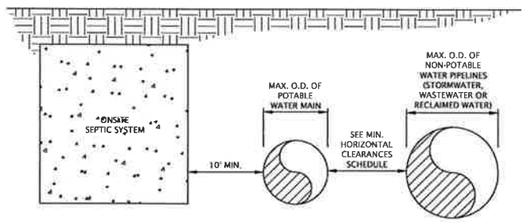

MINIMUM HORIZONTAL CLEARANCES
1. STORMWATER (GRAVITY & PRESSURE): 3' (MIN.)
2. VACUUM WASTEWATER: 3' (MIN.) - 10'+ (PREFERRED)
3. WASTEWATER (GRAVITY & PRESSURE): 6' (MIN.) - 10+ (PREFERRED)
4. WASTEWATER (GRAVITY): 3' (MIN.) WHERE BOTTOM OF WATER MAIN IS 6'+ ABOVE TOP OF WASTEWATER PIPE

POTABLE WATER MAIN PIPE REQUIREMENTS WITH LESS THAN MINIMUM HORIZONTAL CLEARANCES
1. CONSTRUCT OTHER (NON-POTABLE WATER) PIPELINE OF AWWA C-150 DUCTILE IRON PIPE (DIP):
   4"-12" - CLASS 350 OR EQUIVALENT WALL STRENGTH PIPE
   14"-24" - CLASS 250 OR EQUIVALENT WALL STRENGTH PIPE
   30"+ - CLASS 150 OR EQUIVALENT WALL STRENGTH PIPE
2. USE WELDED, FUSED OR RESTRAINED JOINT PIPE FOR EITHER (POTABLE OR NON-POTABLE) PIPE.
3. USE WELDED STEEL CASING OR 4" (MIN.) CONCRETE (2500 PSI MIN.) ENCASEMENT FOR EITHER (POTABLE OR NON-POTABLE) PIPE.

HORIZONTAL SEPARATION REQUIREMENTS

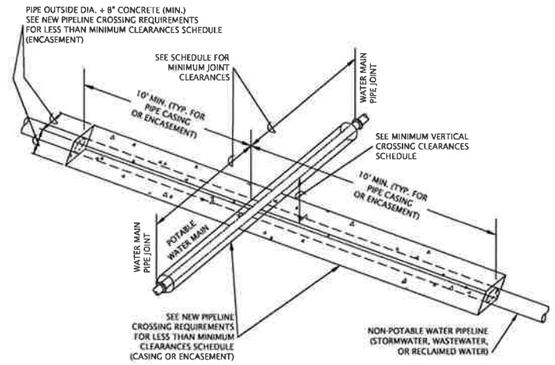

MINIMUM VERTICAL CROSSING CLEARANCES
1. WATER MAIN ABOVE STORMWATER (GRAVITY) OR WASTEWATER (GRAVITY & VACUUM): 6" (MIN.) 12"+ (PREFERRED)
2. WATER MAIN BELOW STORMWATER (GRAVITY) OR WASTEWATER (GRAVITY & VACUUM): 12" (MIN.)
3. WATER MAIN ABOVE OR BELOW STORMWATER, WASTEWATER & RECLAIMED WATER (PRESSURE): 12" (MIN.)

MINIMUM WATER MAIN JOINT SPACING
1. STORMWATER (GRAVITY & PRESSURE), WASTEWATER (VACUUM) OR RECLAIMED WATER (PRESSURE): 3' O.C.
2. WASTEWATER (GRAVITY & PRESSURE): 6' O.C.

NEW PIPELINE CROSSING REQUIREMENTS FOR LESS THAN MINIMUM VERTICAL CROSSING CLEARANCES
1. POTABLE WATER MAIN:
   WATER MAIN OR WATER MAIN IN CASING PIPE OF AWWA C-150 DUCTILE IRON PIPE (DIP):
   4"-12" - CLASS 350 OR EQUIVALENT WALL STRENGTH PIPE
   14"-24" - CLASS 250 OR EQUIVALENT WALL STRENGTH PIPE
   30"+ - CLASS 150 OR EQUIVALENT WALL STRENGTH PIPE
   OR
   4" (MIN.) CONCRETE (2500 PSI MIN.) ENCASEMENT OF WATER MAIN - 10' (MIN.) EACH SIDE OF CROSSING
2. WASTEWATER / RECLAIMED WATER MAIN:
   WASTEWATER / RECLAIMED WATER MAIN OR WASTEWATER / RECLAIMED WATER MAIN IN CASING PIPE OF AWWA C-150 DUCTILE IRON PIPE (DIP):
   4"-12" - CLASS 350 OR EQUIVALENT WALL STRENGTH PIPE
   14"-24" - CLASS 250 OR EQUIVALENT WALL STRENGTH PIPE
   30"+ - CLASS 150 OR EQUIVALENT WALL STRENGTH PIPE
   OR
   4" (MIN.) CONCRETE (2500 PSI MIN.) ENCASEMENT OF WASTEWATER / RECLAIMED WATER MAIN - 10' (MIN.) EACH SIDE OF CROSSING

VERTICAL CROSSING SEPARATION REQUIREMENTS

WATER MAIN (3" DIA. & GREATER)
SEPARATIONS FROM STORMWATER, WASTEWATER & RECLAIMED WATER PIPELINES

N.T.S. (SEE FDEP RULE 62-555.314(1) & (2) F.A.C.)

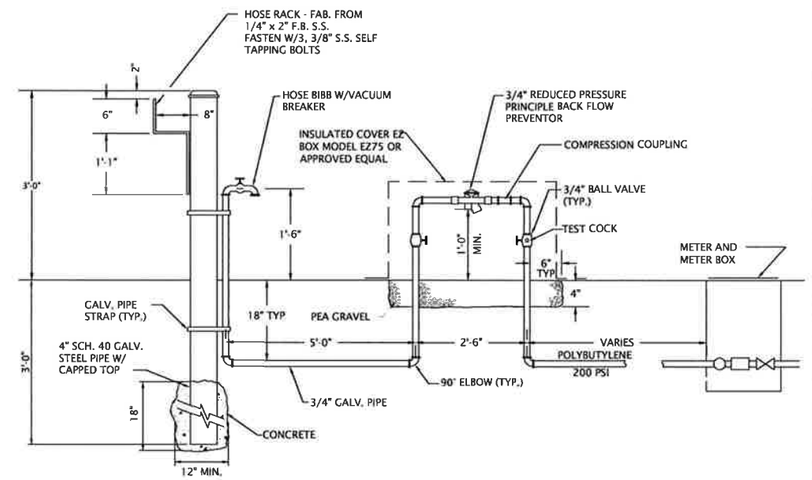

PUMPING STATION WATER SERVICE DETAIL

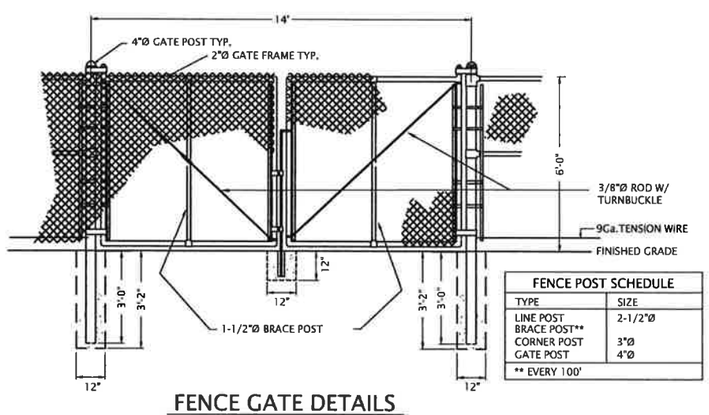

FENCE POST SCHEDULE	
TYPE	SIZE
LINE POST	2-1/2"Ø
BRACE POST**	
CORNER POST	3"Ø
GATE POST	4"Ø
** EVERY 100'	

FENCE GATE DETAILS

N.T.S.

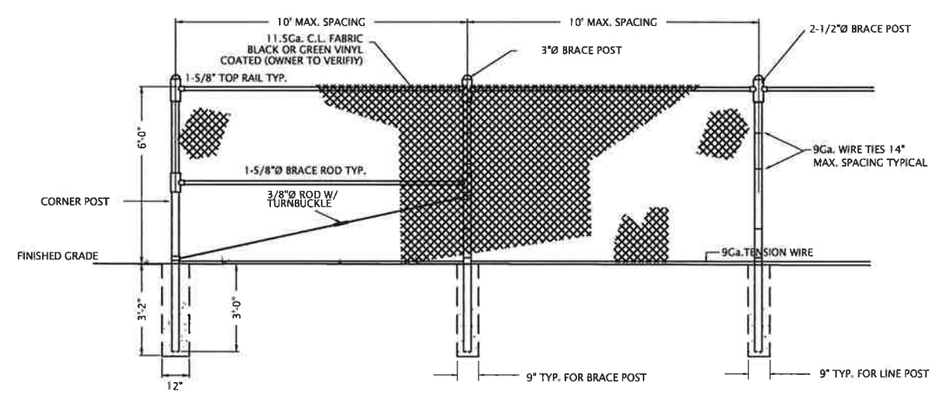

FENCE DETAILS

N.T.S.

FUNDING SUBMITTAL

Hatch Mott MacDonald
Hatch Mott MacDonald Florida, LLC
Architects Engineers Surveyors
AA - C000008 EB - 0000015 LB - 0000183
11 C West 23rd Street
Panama City, Florida 32405
Telephone: (850) 763-5389 • Fax: (850) 763-9396

MAIN LIFT STATION REPLACEMENT
MARY ESTHER, FL

REVISION DESCRIPTION | DATE | REV.

DATE: 05/2015
DESIGNED BY: R.SHANAGHAN
DRAWN BY: Z.WORLEY
PROJECT ENGINEER: A.ZAFAR
PROJECT MANAGER:
HMM PROJECT NUMBER: 332640

FLORIDA LICENSE NO.
DATE

SHEET TITLE:
STANDARD DETAILS

SHEET NUMBER:
STD2.0

This drawing is the property of Hatch Mott MacDonald Florida, LLC, and may not be reproduced without written permission.

This document should not be relied on or used in circumstances other than those for which it was originally prepared and for which Hatch Mott MacDonald was commissioned. Hatch Mott MacDonald accepts no responsibility for this document to any party other than the person by whom it was commissioned.

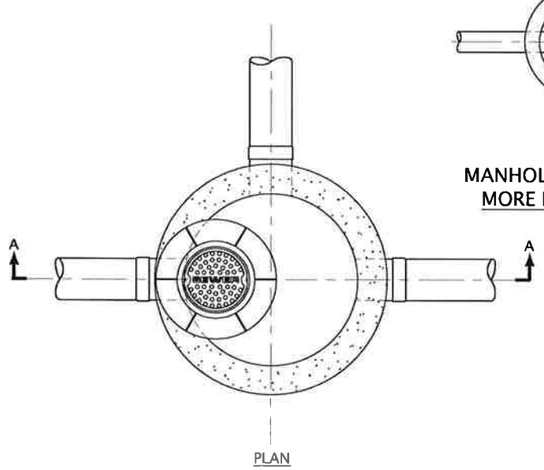

PLAN

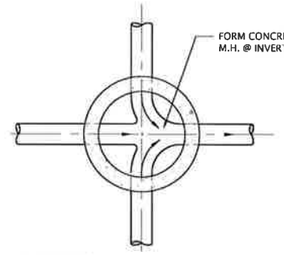

MANHOLE WITH THREE OR MORE PIPES AT INVERT

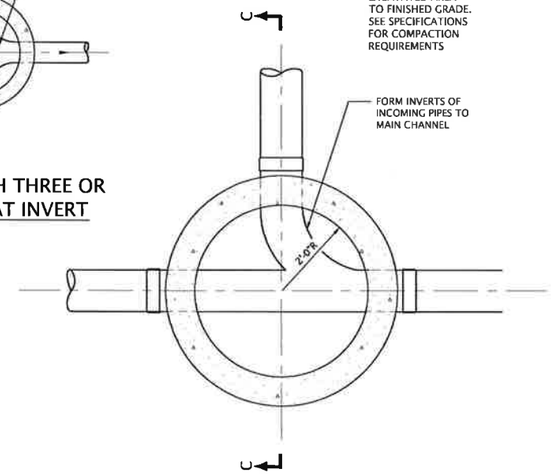

SECTION B-B

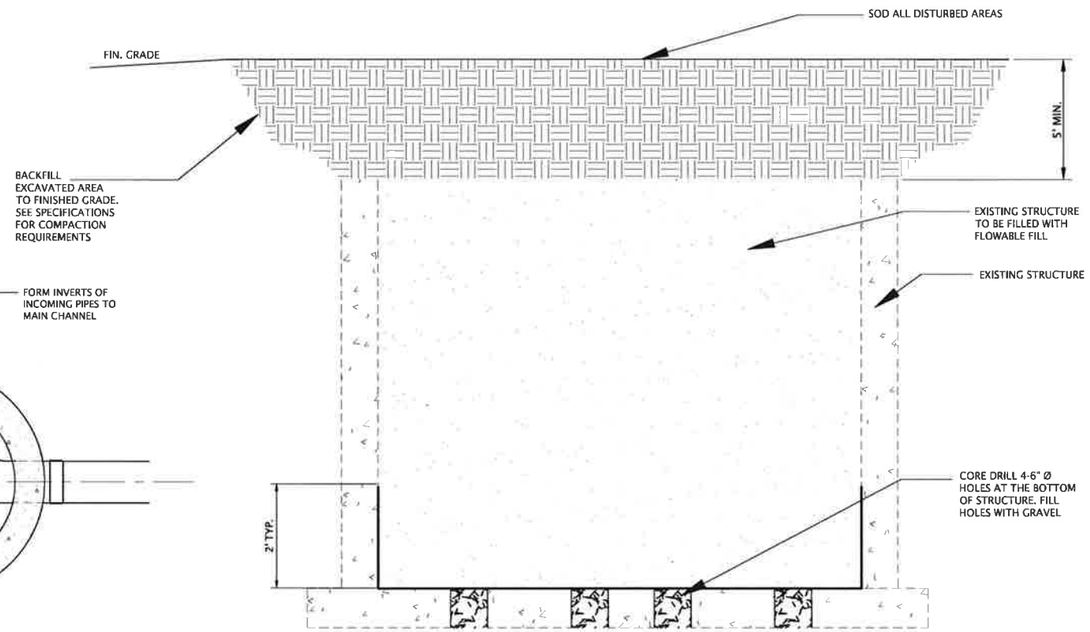

ABANDON STRUCTURE DETAIL

SCALE: NTS

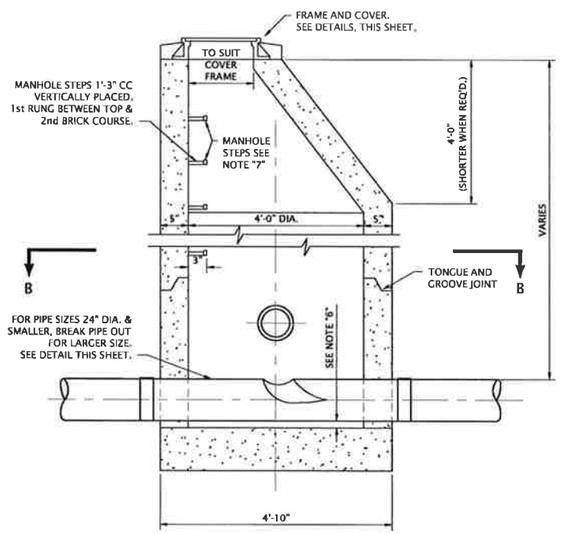

SECTION A-A

DETAIL OF MANHOLE FOR PIPE 24" DIA. & SMALLER

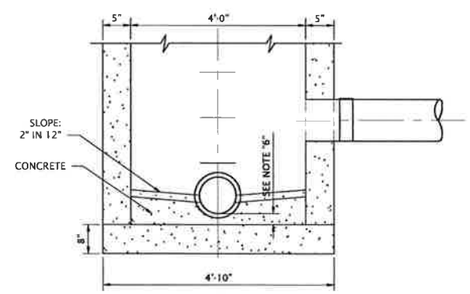

SECTION C-C

1. MANHOLE SHALL CONFORM TO A.S.T.M. C 478 SPECIFICATIONS.
2. JOINTING COMPOUND SHALL BE RAM NECK, TYPE 1, ROPE FROM PLASTIC GASKET OR EQUAL
3. ALL PATCHING TO BE DONE WITH HYDRAULIC CEMENT. NO MORTAR REPAIRS PERMITTED.
4. PIPE CONNECTION SHALL BE A WATERTIGHT CONNECTION USING A-LOK, KORE-N-SEAL OR LOCK-JOINT CONNECTOR.
5. EXTERIOR OF MANHOLE TO HAVE 3 COATS OF SHOP APPLIED BITUMASTIC, GIVING A TOTAL DRY FILM THICKNESS OF 32 MILS.
6. DISTANCE BETWEEN INVERT OF PIPE AND OUTSIDE OF BELL DETERMINES THE ELEVATION OF TOP OF 8" CONCRETE SLAB.
7. MANHOLE STEPS SHALL BE STEEL RODS ENCASED IN POLYPROPYLENE PLASTIC AND SHALL BE TYPE "PS-1-8" AS MANUFACTURED BY M.A. INDUSTRIES OR AN APPROVED EQUAL.
8. PREFORMED INVERTS WILL NOT BE ACCEPTABLE. INVERTS SHALL BE FORMED AND POURED AFTER MANHOLE AND PIPE HAVE BEEN INSTALLED.

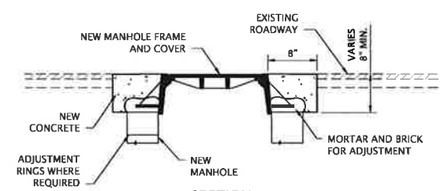

SECTION

NOTES:

1. THE PORTION OF THE FRAME AND COVER WHICH FORMS THE COVER SEAT SHALL BE MACHINED SO THAT NO ROCKING IS POSSIBLE.
2. MANHOLES INSTALLED IN NON-PAVED AREAS SHALL BE SET SUCH THAT THE COVER IS 6" MIN. BELOW GRADE UNLESS NOTED OTHERWISE OR DIRECTED IN THE FIELD BY THE ENGINEER.
3. MANHOLES IN PAVED AREAS SHALL BE BROUGHT TO PROPER GRADE AFTER THE PAVING HAS BEEN REPLACED. NEW PAVING SHALL BE CUT AS REQUIRED TO BRING MANHOLE TO GRADE WITH CONCRETE COLLAR AS SHOWN.
4. ALL MANHOLE FRAMES AND COVERS SHALL BE SET TO GRADE AND IN THE SAME PLANE OF THE PAVED SURFACE.

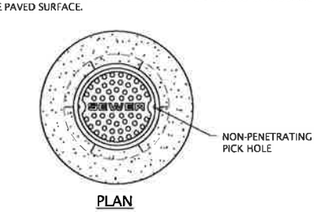

PLAN

MANHOLE FRAME & COVER DETAIL

FUNDING SUBMITTAL

Hatch Mott MacDonald
Hatch Mott MacDonald Florida, LLC
Architects Engineers Surveyors
AA - C000035 EB 0000155 LB - C000783
11-C West 23rd Street
Panama City, Florida 32405
Telephone: (850) 763-8306 ▪ Fax: (850) 763-8306

MAIN LIFT STATION REPLACEMENT
MARY ESTHER, FL

REV.	DATE	REVISION DESCRIPTION

DATE: 05/2015
DESIGNED BY:
DRAWN BY: R.SHAMAGHAN
PROJECT ENGINEER: Z.WORLEY
PROJECT MANAGER: A.ZAFAR
HMM PROJECT NUMBER: 332840

FLORIDA LICENSE NO.
DATE

SHEET TITLE:
STANDARD DETAILS

SHEET NUMBER:
STD3.0

This drawing is the property of Hatch Mott MacDonald Florida, LLC, and may not be reproduced without written permission.

This document should not be relied on or used in circumstances other than those for which it was originally prepared and for which Hatch Mott MacDonald was commissioned. Hatch Mott MacDonald accepts no responsibility for this document to any party other than the person by whom it was commissioned.

GENERAL NOTES

1. SPACE CLASSIFICATIONS PER NFPA 820 2008 EDITION.
2. ALL WORK IN HAZARDOUS AREAS SHALL BE IN ACCORDANCE WITH ARTICLE 501 OF THE NATIONAL ELECTRIC CODE.

CLASSIFICATION LEGEND

CLASS I, DIVISION 1

CLASS I, DIVISION 2

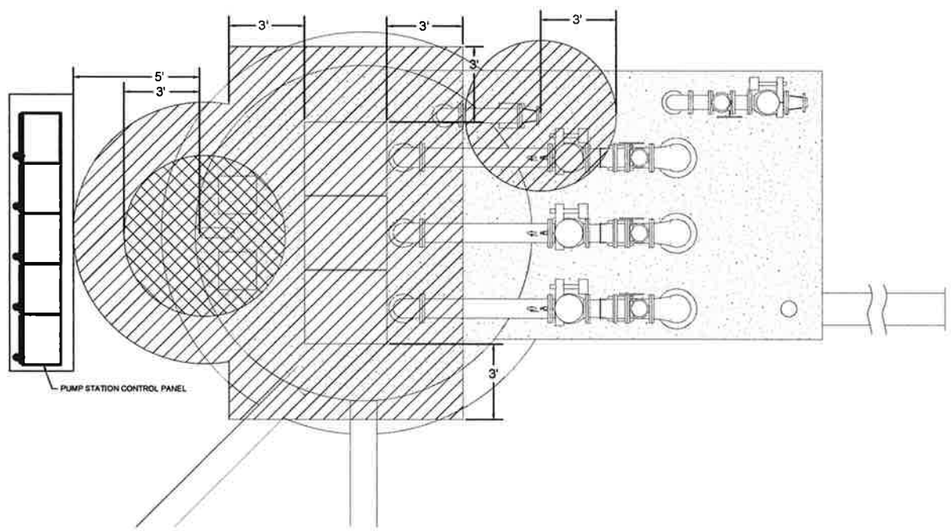

PUMP STATION CLASSIFICATION PLAN

SCALE: 3/8"=1'-0"

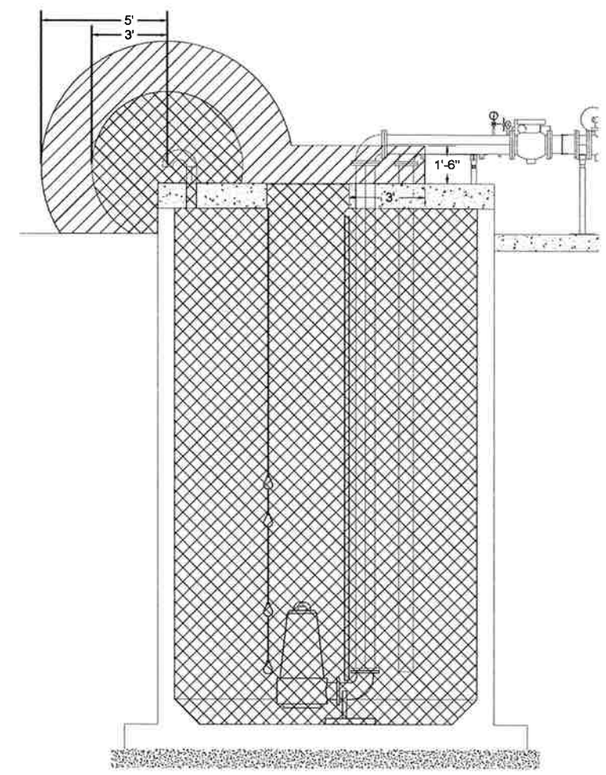

PUMP STATION CLASSIFICATION SECTION

SCALE: 3/8"=1'-0"

FUNDING SUBMITTAL

Hatch Mott MacDonald
Hatch Mott MacDonald Florida, LLC

Architects Engineers Surveyors
AA - C0000035 EB - 0000155 LB - 0006783
120 Richard Jackson Blvd., Suite 180
Panama City Beach, Florida 32407
Telephone: (850) 236-5831 • Fax: (850) 234-1952

CITY OF MARY ESTHER
PUMP STATION UPGRADE
MARY ESTHER, FLORIDA

REVISION DESCRIPTION	REV.	DATE

DATE: APRIL 2015
DESIGNED BY: D. PHILLIPS
DRAWN BY: H. ERSKINE
PROJECT ENGINEER: D. PHILLIPS
PROJECT MANAGER:
H.M.M. PROJECT NUMBER:

D. W. PHILLIPS
FLORIDA LICENSE NO. 18128

DATE

SHEET TITLE:

PUMP STATION CLASSIFICATION PLAN

SHEET NUMBER:

E1.0

This document should not be relied on or used in circumstances other than those for which it was originally prepared and for which Hatch Mott MacDonald was commissioned. Hatch Mott MacDonald accepts no responsibility for this document to any party other than the person by whom it was commissioned.

This drawing is the property of Hatch Mott MacDonald Florida, LLC, and may not be reproduced without written permission.

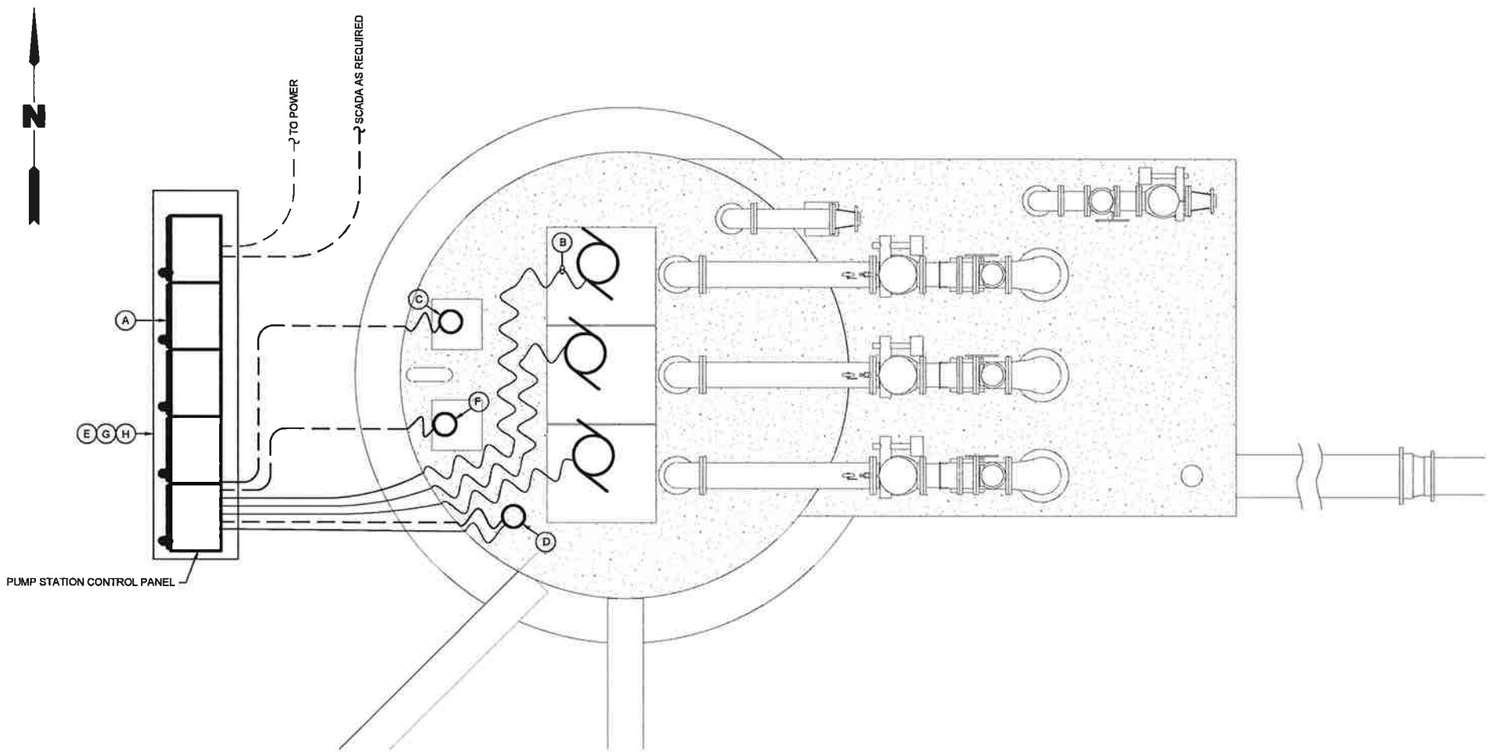

PUMP STATION ELECTRICAL PLAN

SCALE: 1/2"=1'-0"

GRAPHIC SCALE

GENERAL NOTES

1. ALL FLOATS SHALL BE INSTALLED USING A WEIGHTED STAINLESS STEEL FLOAT MOUNTING SYSTEM.
2. SEE CONDUIT ENTRY DETAIL.

KEY NOTES

- (A) PUMP STATION CONTROL PANEL.
- (B) PUMP CABLE PER MFR RECOMMENDATIONS. (TYP)
- (C) LEVEL FLOATS.
- (D) LEL DETECTOR.
- (E) CONCRETE FOUNDATION. REFER TO STRUCTURAL.
- (F) BACKUP FLOATS.
- (G) PROVIDE 6'W X 14'L X 24"D CONCRETE FOUNDATION FOR PUMP CONTROL PANEL.
- (H) MOUNT PANEL TO FOUNDATION PER PANEL MFG. RECOMMENDATIONS.

FUNDING SUBMITTAL

Hatch Mott MacDonald
Hatch Mott MacDonald Florida, LLC
Architects Engineers Surveyors
AA - C000035 EB - 0000155 LB - 0006783
1000 Sawgrass Corporate Parkway, Suite 317
Sunrise, Florida 33323
Telephone: (954) 236-6831 • Fax: (954) 234-1952

CITY OF MARY ESTHER
PUMP STATION UPGRADE
MARY ESTHER, FLORIDA

REVISION DESCRIPTION	DATE	REV.

DATE: APRIL 2015
DESIGNED BY: D. PHILLIPS
DRAWN BY: H. ERSKINE
PROJECT ENGINEER: D. PHILLIPS
PROJECT MANAGER:
H.M.M. PROJECT NUMBER:

D. W. PHILLIPS
FLORIDA LICENSE NO. 18128
DATE

SHEET TITLE:
PUMP STATION ELECTRICAL PLAN

SHEET NUMBER:
E2.0

This document should not be relied on or used in circumstances other than those for which it was originally prepared and for which Hatch Mott MacDonald was commissioned. Hatch Mott MacDonald accepts no responsibility for this document to any party other than the person by whom it was commissioned.

This drawing is the property of Hatch Mott MacDonald Florida, LLC, and may not be reproduced without written permission.

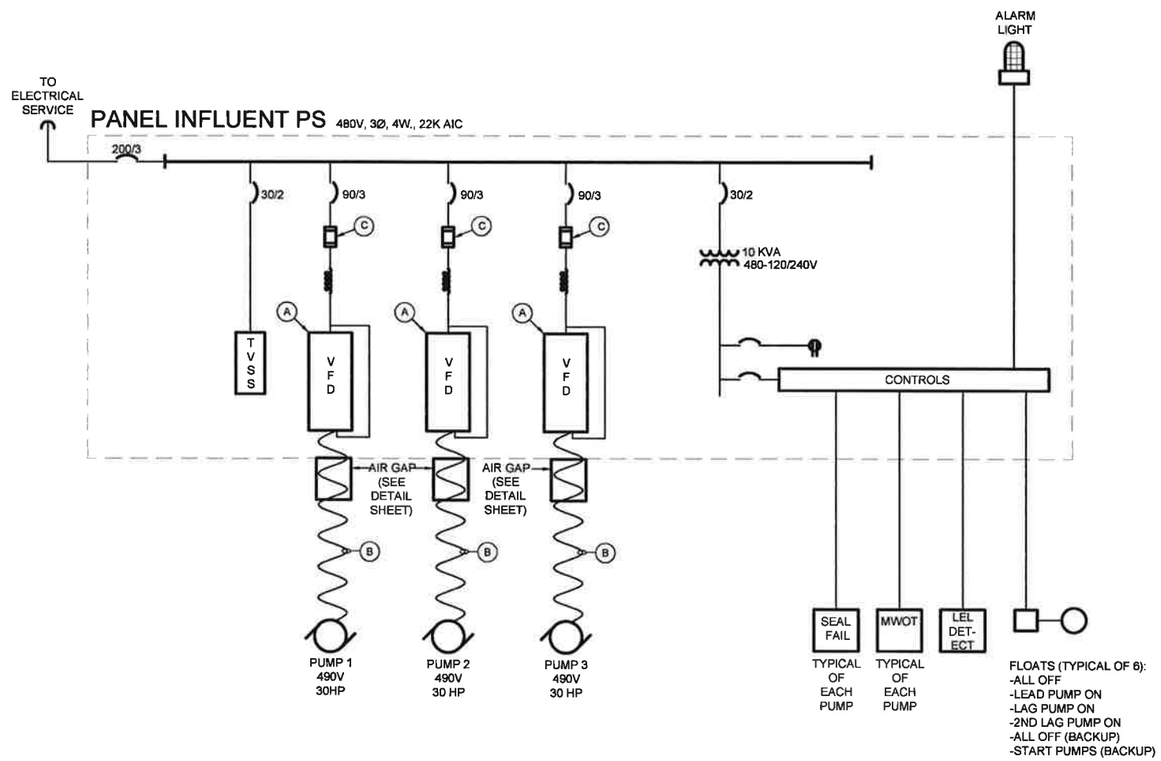

PUMP STATION ONE LINE DIAGRAM

NO SCALE

GENERAL NOTES

KEY NOTES

(A) VFD.
(B) PUMP CABLE.
(C) FUSES.

FUNDING SUBMITTAL

Hatch Mott MacDonald
Hatch Mott MacDonald Florida, LLC
Architects Engineers Surveyors
AA - C000035 EB - 0000155 LB - 0006783
120 Richard Jackson Blvd., Suite 100
Panama City Beach, Florida 32407
Telephone: (850) 236-5831 • Fax: (850) 234-1952

CITY OF MARY ESTHER
PUMP STATION UPGRADE
MARY ESTHER, FLORIDA

REV.	DATE	REVISION DESCRIPTION

DATE: APRIL 2015
DESIGNED BY: D. PHILLIPS
DRAWN BY: H. ERSKINE
PROJECT ENGINEER: D. PHILLIPS
PROJECT MANAGER:
H.M.M. PROJECT NUMBER:

D.W. PHILLIPS
FLORIDA LICENSE NO. 161126
DATE

SHEET TITLE:
PUMP STATION ELECTRICAL ONE LINE DIAGRAM

SHEET NUMBER:
E3.0

This document should not be relied on or used in circumstances other than those for which it was originally prepared and for which Hatch Mott MacDonald was commissioned. Hatch Mott MacDonald accepts no responsibility for this document to any party other than the person by whom it was commissioned.

This drawing is the property of Hatch Mott MacDonald Florida, LLC, and may not be reproduced without written permission.

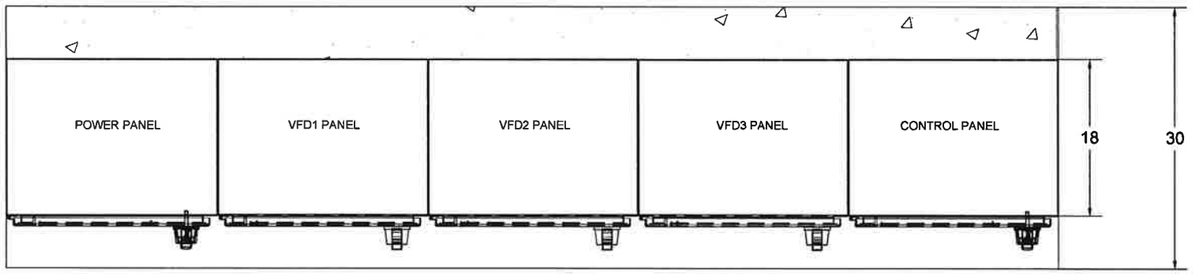

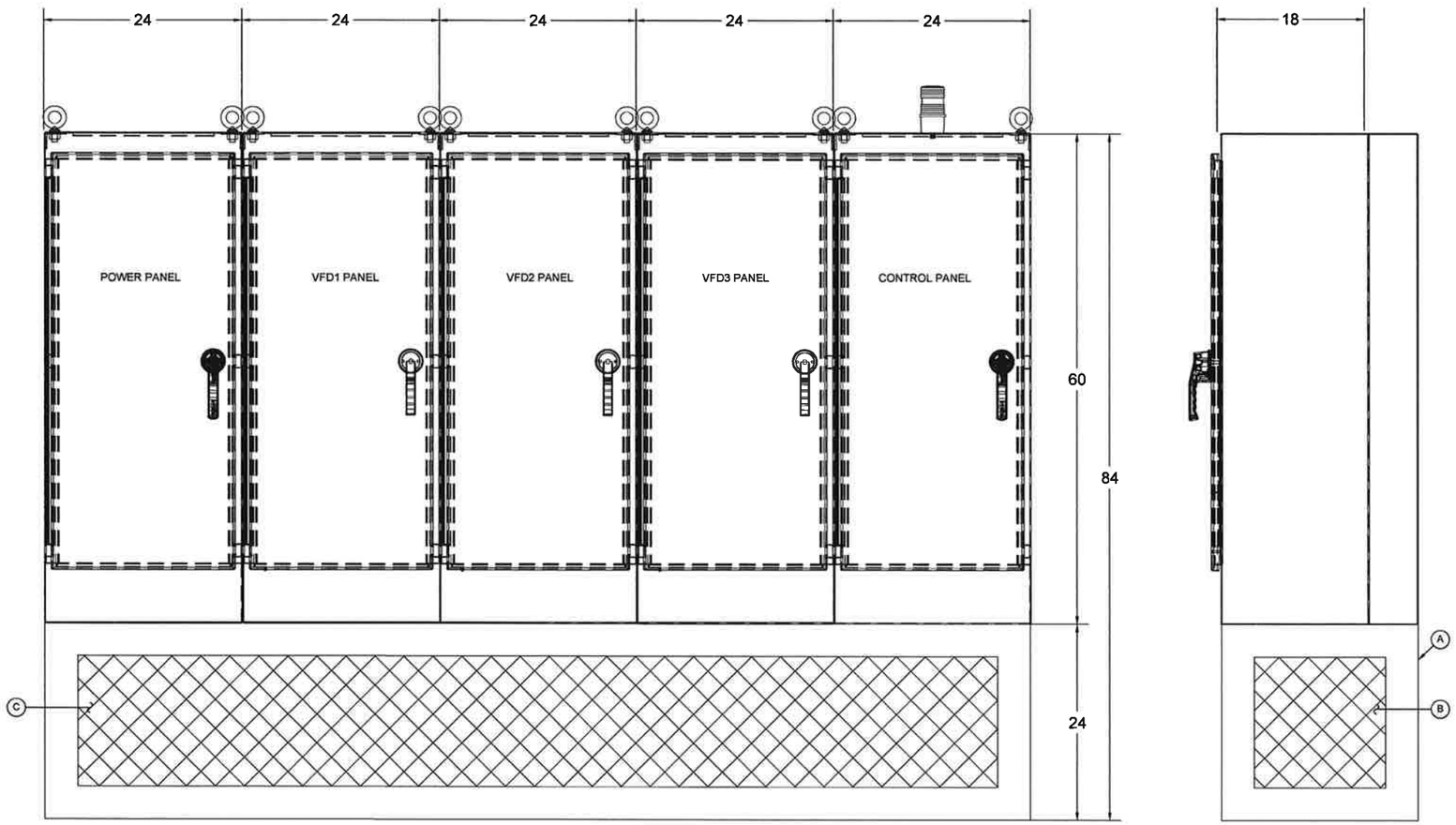

PUMP STATION CONTROL PANEL

NO SCALE

GENERAL NOTES

1. POWER PANEL TO BE DESIGNATED AS NFPA 70E, LEVEL 0 PPE.
2. POWER PANEL TO HAVE A CURRENT LIMITING ENCLOSED BREAKER OR BE UL LISTED AS A PANELBOARD.

KEY NOTES

(A) STAINLESS STEEL SUPPORT STRUCTURE.

(B) STAINLESS STEEL GRATING.

(C) FRONT AREA TO BE REMOVABLE FOR CABLE ACCESS.

FUNDING SUBMITTAL

Hatch Mott MacDonald
Hatch Mott MacDonald Florida, LLC
Architects Engineers Surveyors
AA - C0000035 EB - 0000155 LB - 0006783
120 Richard Jackson Blvd., Suite 160
Panama City Beach, Florida 32407
Telephone: (850) 236-5831 ≡ Fax: (850) 234-1952

CITY OF MARY ESTHER
PUMP STATION UPGRADE
MARY ESTHER, FLORIDA

REV.	DATE	REVISION DESCRIPTION

DATE: APRIL 2015
DESIGNED BY: D. PHILLIPS
DRAWN BY: H. ERSKINE
PROJECT ENGINEER: D. PHILLIPS
PROJECT MANAGER:
H.M.M. PROJECT NUMBER:

D. W. PHILLIPS
FLORIDA LICENSE NO. 18128

DATE

SHEET TITLE:

PUMP STATION PANEL

SHEET NUMBER:

E4.0

This document should not be relied on or used in circumstances other than those for which it was originally prepared and for which Hatch Mott MacDonald was commissioned. Hatch Mott MacDonald accepts no responsibility for this document to any party other than the person by whom it was commissioned.

This drawing is the property of Hatch Mott MacDonald Florida, LLC, and may not be reproduced without written permission.

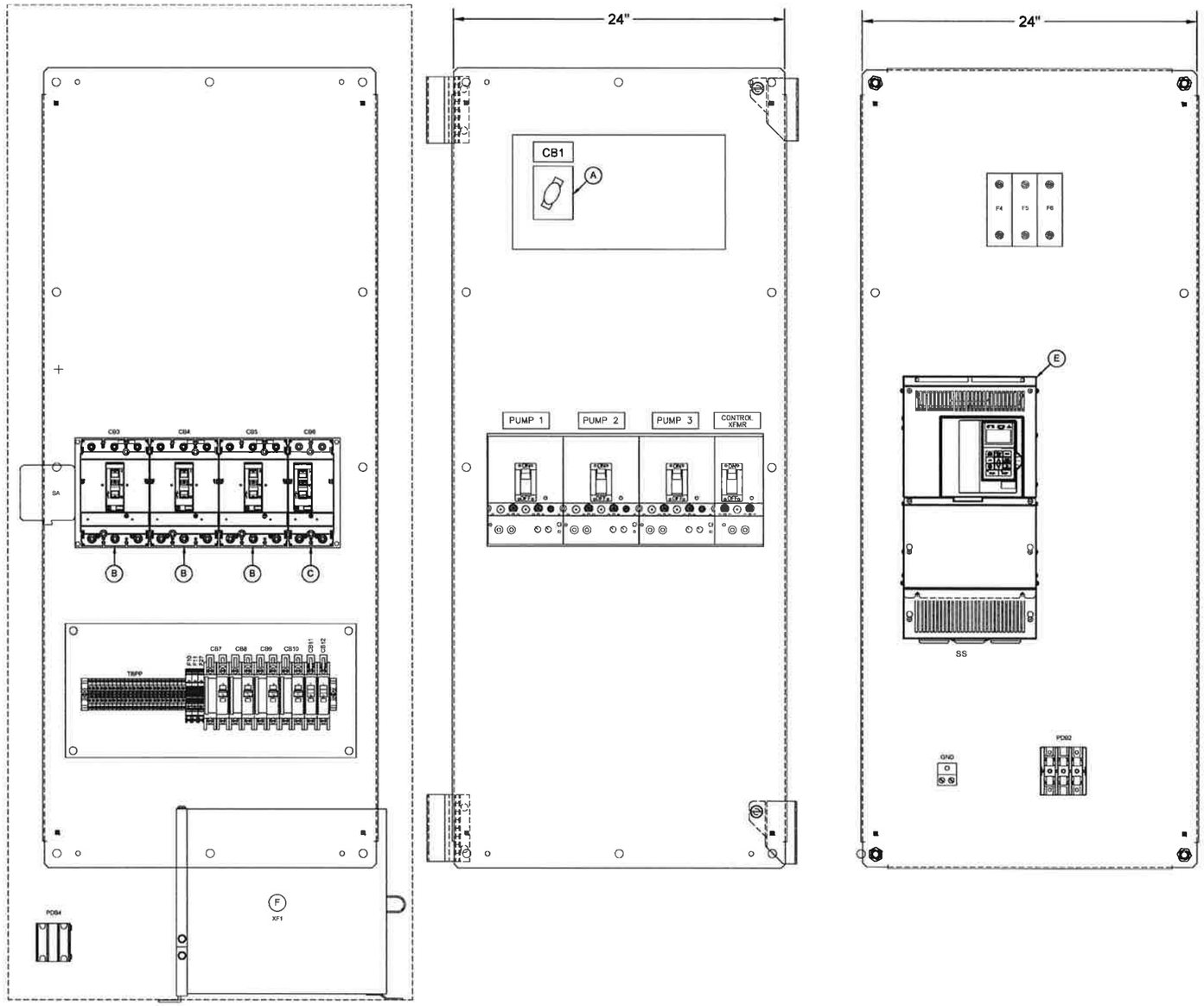

GENERAL NOTES

1. PANEL LAYOUT IS ONLY ONE OF SEVERAL METHODS.

KEY NOTES

- (A) MAIN BREAKER.
- (B) PUMP BREAKERS.
- (C) CONTROL POWER.
- (D) TRANSFORMER PRIMARY BREAKER.
- (E) VFD.
- (F) ENCLOSED CONTROL POWER TRANSFORMER.

FUNDING SUBMITTAL

Hatch Mott MacDonald
Hatch Mott MacDonald Florida, LLC
Architects Engineers Surveyors
AA - C0000035 EB - 0000155 LB - 0006783
1201 Richard Jackson Blvd., Suite 160
Panama City Beach, Florida 32407
Telephone: (850) 236-5831 ■ Fax: (850) 234-1952

CITY OF MARY ESTHER
PUMP STATION UPGRADE
MARY ESTHER, FLORIDA

REVISION DESCRIPTION	REV.	DATE

DATE: APRIL 2015
DESIGNED BY: D. PHILLIPS
DRAWN BY: H. ERSKINE
PROJECT ENGINEER: D. PHILLIPS
PROJECT MANAGER:
H.M.M. PROJECT NUMBER:

D. W. PHILLIPS
FLORIDA LICENSE NO. 18128
DATE

SHEET TITLE:

PUMP STATION PANEL

SHEET NUMBER:

E5.0

This document should not be relied on or used in circumstances other than those for which it was originally prepared and for which Hatch Mott MacDonald was commissioned. Hatch Mott MacDonald accepts no responsibility for this document to any party other than the person by whom it was commissioned.

This drawing is the property of Hatch Mott MacDonald Florida, LLC, and may not be reproduced without written permission

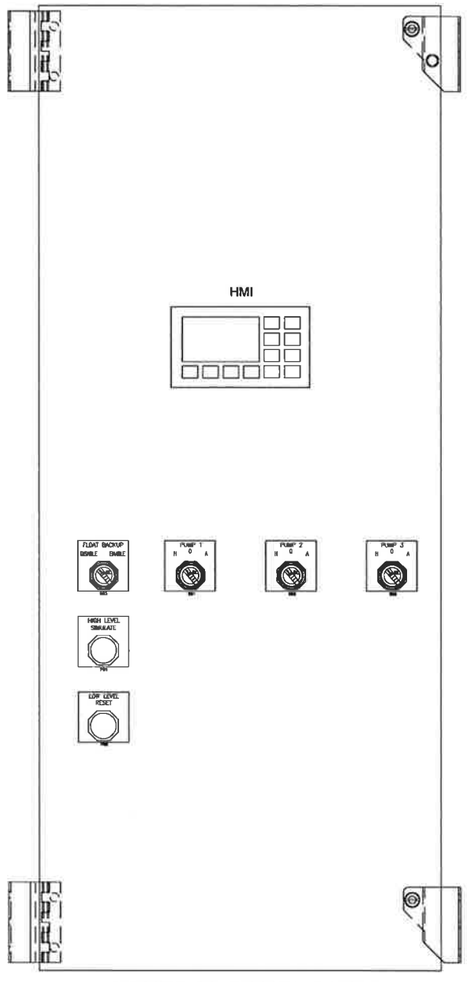

CONTROL PANEL DEAD FRONT PANEL

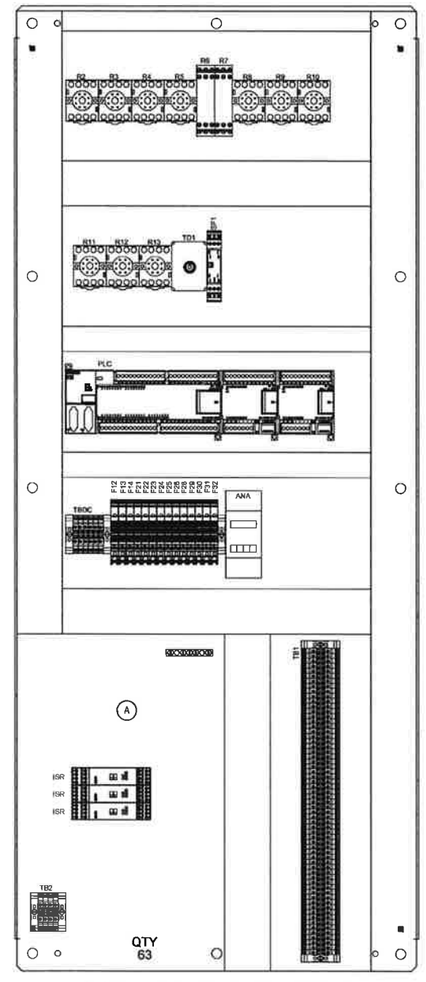

CONTROL PANEL BACK PANEL

GENERAL NOTES

1. HMI TO BE READABLE IN DIRECT SUNLIGHT.
2. LEL ALARM TO TRIGGER PUMP STATION ALARM LIGHT AND DISPLAY ON HMI.

KEY NOTES

(A) INTRINSICALLY SAFE BARRIER RELAY AREA.

FUNDING SUBMITTAL

Hatch Mott MacDonald
Hatch Mott MacDonald Florida, LLC
Architects Engineers Surveyors
AA - C0000035 EB - 0000155 LB - 0006783
120 Richard Jackson Blvd., Suite 190
Panama City Beach, Florida 32407
Telephone: (850) 234-5400 • Fax: (850) 234-1552

CITY OF MARY ESTHER
PUMP STATION UPGRADE
MARY ESTHER, FLORIDA

REVISION DESCRIPTION	REV.	DATE

DATE: APRIL 2015
DESIGNED BY: D. PHILLIPS
DRAWN BY: H. ERSKINE
PROJECT ENGINEER: D. PHILLIPS
PROJECT MANAGER:
H.M.M. PROJECT NUMBER:

D. W. PHILLIPS
FLORIDA LICENSE NO. 18128
DATE

SHEET TITLE:
PUMP STATION PANEL

SHEET NUMBER:
SK-6

This document should not be relied on or used in circumstances other than those for which it was originally prepared and for which Hatch Mott MacDonald was commissioned. Hatch Mott MacDonald accepts no responsibility for this document to any party other than the person by whom it was commissioned.

This drawing is the property of Hatch Mott MacDonald Florida, LLC, and may not be reproduced without written permission.

DIST 4

OKALOOSA COUNTY
RIGHT-OF-WAY PERMIT

Date April 29, 2015 Permit No. 15-4012

Permittee City of Mary Esther
Requesting permission from Okaloosa County to construct and maintain the utility or perform the following work within the County right-of-way:

Construction of a new main lift station within the East Doolittle Boulevard ROW.

1. Proposed work is within the corporate limits of the following municipalities: City of Mary Esther
2. Permittee declares that prior to commencement of work he has contacted all utilities and has ascertained the location of all existing utilities, both aerial and underground utilities/municipalities.
3. It is expressly stipulated that this permit is a license for permissive use only and that the placing of facilities upon public property pursuant to this permit shall not operate to create or vest any property right in said holder.
4. Any Utility heretofore or hereafter placed upon, under, over, or along any right-of-way that is found by the Public Works director to be unreasonably interfering in any way with the convenient, safe, or continuous use, or the maintenance, improvement, extension, or expansion, of such right-of-way shall, upon 30 days' written notice to the utility or it's agent by the Public Works Director, be removed or relocated by such utility at its own expense except as otherwise provided in section 337.403 Florida Statutes.
5. All road crossings shall be by directional bore except on non-paved streets. All paved or concrete driveway crossings shall be by directional bore except for utility lines greater than or equal to six (6) inch diameter.
6. The Permittee is responsible for obtaining all other Federal, State, and local permits.
7. All work shall be conducted in accordance with good engineering practices, shall be maintained in reasonably good condition and repair and shall be in compliance with Florida general law.
8. All appropriate traffic control devices shall be installed.
9. All appropriate erosion and sedimentation control devices shall be installed.
10. All County Property shall be restored to its original condition, in accordance with county specifications, and in a manner satisfactory to the Public Works Director or their representative.
11. The attached sketch covering details of this installation shall be made a part of this permit. Sketch to be furnished by applicant.
12. The permittee shall commence actual construction in good faith within sixty (60) days from the date of said permit approval and shall be completed within 180 days.
13. The construction and maintenance of such utility or other permitted work shall not interfere with the property and rights of a prior permittee.
14. **Special conditions and instructions:** Doolittle Blvd R/W VARIES 104' to 106'
15. It is understood and agreed that the rights and privileges herein set out are granted only to the extent of the County's right, title and interest in the land to be entered upon and used by the holder, and the holder will, at all times, assume all risk of and indemnify, defend and save harmless the County of Okaloosa from and against any and all loss, damage, cost of expense arising in any manner on account of the exercise or attempted exercises by said holder of the aforesaid rights and privileges, during construction, all safety regulations of the County shall be observed and the holder must take such measures, including placing and display of safety devices, as may be necessary in order to safely conduct the public through the project area in accordance with adequate safety practices.
16. The Road and Bridge Division of Public Works Department shall be notified twenty-four (24) hours in advance of starting work at 682-5770; Reference permit number 4012
17. In the case of noncompliance with the County's requirements this permit is void and the facility will have to be brought into compliance or removed from the right of way at no cost to the County.
18. **Return form to: Public Works /Road Department, 1759 South Ferdon Blvd., Crestview, FL 32536 or FAX to: (850) 689-5786.**
19. **Roadway construction is proposed or underway yes ( ) no (X)**

Submitted By: City of Mary Esther 850-243-3566 Robert Herbstreith
Permittee Name or Company Name and Phone Number (Please Print here and sign below)

195 Christobal Road N Mary Esther, FL 32569 850-243-0736
Address FAX NUMBER

Robert Herbstreith Director, Planning and Zoning Department 850-243-3566
Signature, Title and PHONE NUMBER

Approved By: [signature] 5/5/15
County Engineer /Manager **Date**

Revised 1/15/2013

FAxed 5-5-15